PHS MoU Document
A-GN0.00-01-TS

Title: **General Description of Public Personal Handy-phone System**

Version: 01

Date: April 21, 1997

PHS MoU Classification: Unrestricted

List of contents:

1. Introduction
2. General Objectives of PHS
   2.1 Application of Cordless Telephone Concept to Public Mobile Communication
   2.2 Concept of PHS and Existing Public Network Interface
   2.3 PHS Feature
   2.4 Implementation of Wireless Local Loop Based on PHS Technology
3. Basic Technology of PHS
   3.1 PHS Wireless Transmission System
   3.2 Network Technology
4. Area of Application of PHS
   4.1 Public PHS
   4.2 PHS Wireless Local Loop Access System
   4.3 Private PHS
   4.4 Access System to PLMN
5. Outline of PHS MoU Technical Document

ABBREVIATION

Number of pages: 13

PHS MoU Group

c/o Association of Radio Industries and Businesses (ARIB)
14F, Nittochi Bldg., 4-1, Kasumigaseki 1-choume, Chiyoda-ku, Tokyo 100, Japan
TEL +81-3-5510-8599 FAX +81-3-3592-1103

History of Revised Versions

Version	Date	Outline
01	April 21, 1997	Established

GENERAL DESCRIPTION
OF
PERSONAL HANDY-PHONE SYSTEM

Contents

1. Introduction 1
2. General Objective of PHS 2
2.1 Application of Cordless Telephone Concept to Public Mobile Communications 2
2.2 Concept of PHS and Existing Public Network Interface 2
2.3 PHS Feature 2
2.4 Implementation of Wireless Local Loop Based on PHS Technology 3
3. Basic Technology of PHS 3
3.1 PHS Wireless Transmission System 3
3.2 Network Technology 6
4. Area of Application of PHS 10
4.1 Public PHS 10
4.2 PHS Wireless Local Loop Access System 10
4.3 Private PHS 11
4.4 Access System to PLMN 11
5. Outline of PHS MoU Technical Documents 11

ABBREVIATIONS 13

1. Introduction

The Personal Handy-phone System (PHS) is a wireless access system of a micro-cell architecture, using 1.9 GHz frequency band. Figure 1-1/A-GNO.00 shows the general concept of PHS. As seen from the diagram, PHS can be applied to a public mobile communication system, or to a Wireless Local Loop (WLL) that substitutes the existing telephone twisted pair to provide subscribers with telephone services, or to a wireless PBX or a home cordless telephone system, or to transceivers that enable PSs to communicate directly with each other. A Common Air Interface (CAI) of PHS is standardized as RCR STD-28 by Association of Radio Industries and Businesses (ARIB). User-Network and Network-Network Interfaces (UNI and NNI) are based on ITU-T Q-series standards. End to end multimedia protocol is standardized as PHS Internet Access Forum Standard (PIAFS).
In order that PHS be used commonly throughout the world, the PHS MOU technical working group, organized under an international memorandum of understanding is preparing the technical specifications for PHS. This document is a general description of the PHS technical specifications mainly in the areas of objectives, technical features, and application examples.

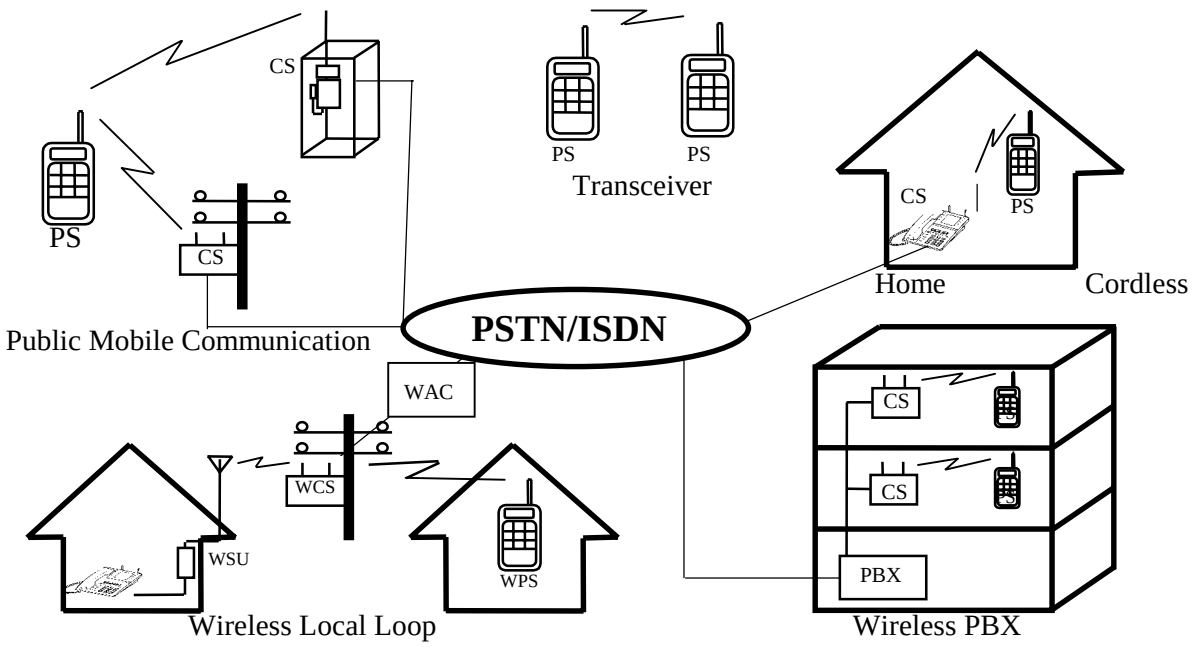

PS : Personal Station•
CS : Cell Station•
WSU : WLL Subscriber Unit
WPS : WLL Personal Station
WCS : WLL Cell Station
WAC : WLL Access Controller
PSTN : Public Switched Telephone Network•
ISDN : Integrated Services Digital Network

Figure 1-1/A-GN0.00 Basic Concept of PHS

2. General Objectives of PHS

The full duplex wireless communication system of PHS employs a micro-cell architecture, has much larger per unit traffic coverage for an area than existing cellular telephone systems. PHS can implement a high-quality voice equivalent to that of existing wired telephone through the employment of 32 kbps ADPCM voice coding, and it can also provide high-speed multimedia services.

2.1 Application of Cordless Telephone Concept to Public Mobile Communications

PHS is a second generation cordless telephone system proposed as a successor to the conventional analog cordless telephones. Conventional analog cordless telephony has been applied to small-scale private communication systems for use in homes or office buildings. PHS does not simply digitize its wireless transmission system but also employs a wireless access system to attain high traffic performance. PHS handles incoming and outgoing calls during traveling through the use of handover and location registration features during talking to provide services equivalent to those of existing cellular telephone systems.

There features enable using PHS not only as a cordless telephone system inside homes or offices but also to enjoy public mobile communication services widely outdoors. Although the micro-cell system has high traffic performance, it is not applicable to high speed mobile communications because handover is frequently required. PHS is designed mainly for mobile communications in urban areas at walking speeds.

2.2 Concept of PHS and Existing Public Network Interface

Conventional mobile communications require an exclusive network. Although this complex network allows communication while traveling at a high speed, there is much complexity in the location registration, handover and other features. In addition, conventional mobile communications require a signaling system that is delegated to perform complicated control operations.
On the other hand, PHS is designed to be directly used and operated in an ISDN network that accommodates ordinary wired telephones, since PHS is considered an extension of the conventional cordless telephone for home use. The location registration and other mobile features are controlled by using the ordinary ISDN signaling system. The control is implemented by the Intelligent Network (IN) features incorporated in the network. This concept allows establishing a large-scale mobile communication network with a smaller initial investment.

2.3 PHS Features

(1) Sharing the PS by different applications
PHS allows both outdoor public communications and indoor private communications in homes and offices through a single CAI. The dynamic channel assignment of PHS enables sharing a single frequency band for a variety of purposes. The use of the same PS for many different applications is not only a great big advantage for users but also reduces the manufacturing cost because the number of PS product types is decreased. The PS sharing feature is expected to implement future services including the one-number service for different applications.

(2) Frequency sharing among multiple common carriers
Another feature of the dynamic channel assignment function allowed by PHS is that a single frequency band can be shared by several operators (common carriers). The feature enables highly

efficient use of frequencies. Frequency sharing eliminates maldistribution of frequency usage due to the scale difference of each operator's operations or the difference of service areas among operators. PHS employs a full Time Division Duplex (TDD) system to facilitate frequency band expansion as the demand for the future traffic increases.

(3) Multimedia communications
PHS employing the 32 kbps ADPCM voice coding technology can transmit 9.6 kbps modem signals similarly to the regular wired telephone system. PHS can also perform 32 kbps bearer communication via the regular ISDN. In addition, 64 kbps bearer communication is being standardized by ARIB.

2.4 Implementation of Wireless Local Loop Based on PHS Technology

The demand is increasing for a wireless local loop to connect calls to the fixed telephone terminal in a subscriber's premises using a wireless access system instead of the normal wired subscriber line. The particularly high traffic performance of PHS is an ideal system for a wireless local loop to substitute the drop wire portion of the subscriber cable. Implementing a wireless local loop requires providing a normal fixed telephone terminal with an interface similar to that provided by the wired subscriber communication system. The PHS MOU technology working group is defining the interface suitable for the wireless local loop.

3. Basic Technology of PHS

3.1 PHS Wireless Transmission System

Table 3-1/A-GNO.00 outlines the PHS wireless transmission system. The PHS MOU Technical Document B-IF 1.00 Series will detail the contents of this section.

Table 3-1/A-GN0.00 PHS Air Interface

Item	PHS Air Interface Specifications
Frequency Band	1895.15-1917.95MHz(77channels)
Carrier Spacing	300kHz
Access Method	TDMA-TDD
Time Slots / RF Carrier	4
Modulation Method	π/4 shift QPSK
Transmission Rate	384kbps
Voice Coding	32kbps/ADPCM
Transmit Power	PS:10mW or less, CS:500mW or less

(1) Micro-cell system
PHS employs a micro-cell system with a cell area limited by the CS transmission output of up to 500 mW and PS output of up to 10 mW. The purpose of the micro-cell system is to provide sufficient traffic performance with fewer frequency bands by increasing the frequency reuse. The employment of the micro-cell system assures voice quality equivalent to that of the wired telephone system by using a wide band channel capacity of 32 kbps. The wireless section employs a 4-channel Time

Division Multiple Access/Time Division Duplex (TDMA/TDD) system, and a physical bit rate of 384 kbps. This secures satisfactory transmission quality without the provision of the automatic equalizer, so that the costs of the PS and the CS can be reduced. The modulation system is •/4 shifted Quadruple Phase Shift Keying (QPSK) for highly efficient use of frequencies.

(2) Multiple access (TDMA/TDD) system
Figure 3-1/A-GNO.00 shows an overview of the PHS wireless transmission frame.

The PHS wireless transmission frame is structured by a 4-channel TDMA system. The frame is implemented in full duplex communication by the downward link from the CS to the PS and the upward link in the opposite direction that are multiplexed by the TDD system. The first channel of the TDMA frame is used as the control channel. A particular frequency is assigned as for the control channel of a particular public communication operator, and the same channel is used at all the Cell Stations (CSs) and Personal Stations (PSs) accommodated in this operator's network. In the call processing of this system, the control information is first exchanged over the control channel, and then one of the remaining three traffic channels (time slots) is assigned for user communication. Which one of the traffic channels, and which frequency channel should be used is specified over the control channel. The TDD system may complicate communication control such as CS synchronization but it reduces the problems of handling increased traffic in the future, since the PHS service frequency band can be easily expanded to both up- and down-ward even after inauguration of service.

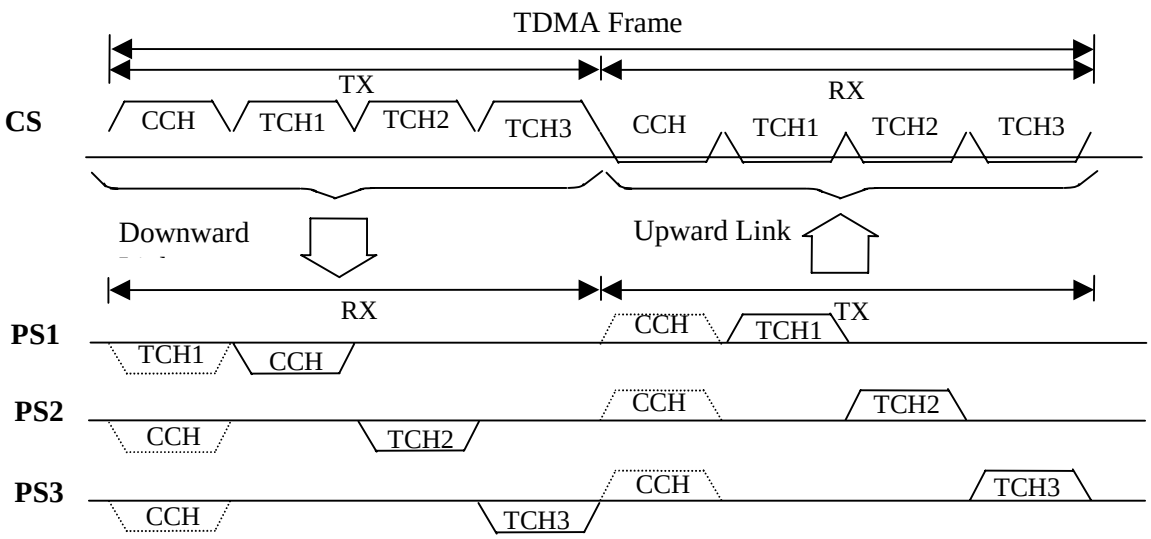

TDMA-TDD:Time Division Multiple Access-Time Division Duplex
CCH:Control Channel , TCH:Traffic Channel , TX:Transmit , RX:Reception

Figure 3-1/A-GN0.00 Air Interface Physical Frame Structure

(3) Fixed Frequency Control channel

Communication control such as incoming/outgoing call notification, number information delivery, and authentication is required before commencing actual talk in the wireless communication system. In PHS, particular frequency channels used exclusively for communication control are specified, and the frequencies are shared by all the CSs and PSs within the same system. This enables the PS to easily exchange the control information with the CS. This eliminates the need for searching for a control channel frequency each time the PS moves from a cell to another adjoining cell. This in turn facilitates handover control and drastically reduces battery consumption for waiting for a call. Sharing the same frequency band by different operators, or by different private and public communication applications requires independent control channel frequencies to be assigned for particular applications.

(4) Dynamic channel assignment system

The control channel designates a traffic channel with the least interference after checking the usage conditions of traffic channel time slots and frequencies when assigning a time slot and a frequency. Thus, the actual traffic channel time slot and frequency vary with each call. This system, referred to as the dynamic channel assignment system, eliminates the need of prior assignment of frequencies used by the CS unlike the ordinary cellular system, enabling the frequencies to be used extremely efficiently. This system features not only the increased efficiency but also increased flexibility and expandability in the system design through installation of an overlapped new cell on the existing cell to meet increased traffic demand. Terminal sharing by multiple operators and PS sharing for public and private communications can only be implemented by the application of the dynamic channel assignment technology.

3.2 Network Technology

3.2.1 Network Configuration

The PHS network employs ISDN signaling for network interface and utilizes the IN functions in the network. These features enable the use of sophisticated functions such as location registration, paging, handover, authentication, and roaming that PHS services require. The contents of this section are detailed in the PHS MOU Technical Documents B-NWO.00 Series. Figure 3-2/A-GNO.00 shows a configuration of the PHS network integrated with IN-structured PSTN/ISDN. The functions of its components are outlined below.

(1) Transit Switch: Has the connecting and switching functions with the other network to allow all the communications with the other network to be performed through the transit switch.

(2) PHS Switching Center (PSC): Performs the processing functions such as paging, mobile switching, and handover in addition to the normal switching functions.

(3) Service Control Point (SCP): Uses the database to perform location registration, authentication, and location search of call receiving PS. The SCP is connected with Toll Switch through Common Channel Signaling (CCS) Network.

(4) CS: Provided with the digital wireless communications functions with the mobile PS, and the ISDN interface with the network.

(5) PS: The terminal possessed by the subscriber to perform digital wireless communications with the CS.

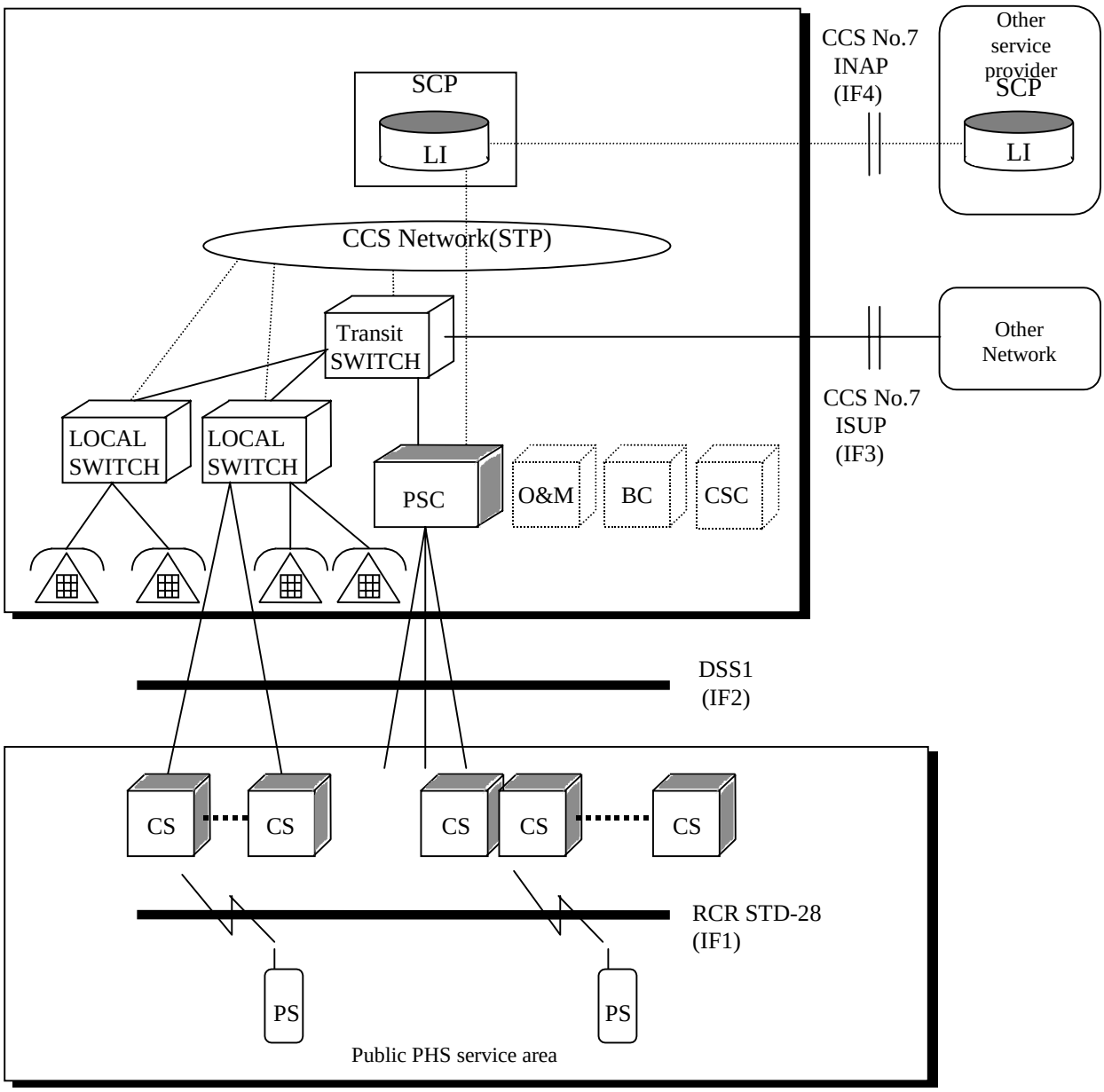

PSC : PHS Switching Center
LI : Location Information
CS : Cell Station
PS : Personal Station
BC : Billing Center
CSC : Customer Service Center
O&M : Operation and Maintenance Center
STP : Signal Transfer Point
SCP : Service Control Point

Figure 3-2/A-GN0.00 PHS Network Configuration

3.2.2 Function Allocation

Implementing the mobile communications requires the switching functions particular to mobile communications that were not possessed by the conventional wired telephony. The following describes these functions briefly.

(1) Location Registration
Location registration means the processing of the constantly maintaining and updating the moving PS location information. The purpose of this processing is to inform the network database of the location information on the called PS in advance because it is necessary to search for the called PS and ring it up when a call is terminating at the particular PS.

(2) Paging
An incoming call message is sent to all the CSs in the paging area having the area code included in the called PS location information. Then the incoming call message is sent from each CS to its served PSs.

(3) Handover
The handover means the processing of maintaining a call in the talking state as the talking PS moves from a radio zone to another using a new CS in the visited zone. The handover function is particularly important for PHS since it uses a micro-cell system.

(4) Authentication
Authentication means the function of preventing an unauthorized user from using communication services illegally. Authentication determines whether or not a PS has subscribed to the requested communications service provider when the terminal makes a connection request such as call origination, call termination, location registration, or handover.

(5) Roaming
Roaming is the service that enables a PHS PS to obtain an incoming or outgoing connection in another network in the same manner as if it was in the original network.

3.2.3 Network Interface

Detailed information can be sent and received between the CS and the network through the use of a control channel to a CS to be connected via the ISDN interface. This provides sophisticated functions required for implementing PHS services, such as location registration, paging, handover, authentication, and roaming as well as the supplemental services inherent to ISDN.

The following outlines the major functions that the ISDN interface provides.

(1) Terminal number notification
This function is to send and receive the PS identification numbers between the digital network and the CSs when originating and terminating a call. It is implemented by designating the PS numbers for calling and called number information elements.

(2) Multiple interface call termination
An area of multiple CSs is used generally as the unit of location registration in order to reduce the

traffic load of location registration information transfer. It is therefore necessary for the network side to perform incoming call processing simultaneously for multiple interfaces for an incoming call.

(3) D-channel sharing

D-channel sharing means the function of performing call control on the information channels (B-channels) of multiple physical circuits with a signaling channel (D-channel) of a single physical circuit. This function reduces the CS cost and group CS installation in the case of installing multiple physical circuits to the same CS.

4. Areas of Application of PHS

4.1 Public PHS

This section outlines public PHS applications. The PHS MoU Technical Document B-GNO.00 details the contents of the section.
Although PHS may not be suitable for mobile communication while traveling at high speed, it does have high traffic performance per unit area as described before. It is more suited for application to the services for pedestrians walking in dense populated areas in large cities. In Japan, PHS has penetrated into user groups such as students and housewives whose daily traveling range is relatively limited. Newly subscribers seem to purchase PHS PSs instead of fixed telephone terminals to use them not only during traveling but also in their homes.

Public PHS is classified by its system configuration into the type such as the public network utilizing type and the independent network type. Figure 4-1/A-GN0.00 shows a conceptual diagram of them. The public network utilizing type will utilize the existing PSTN switching functions and the IN functions on a nationwide scale to provide such functions as location registration, mobile management, authentication, and message accounting that are required for PHS control. In some case, the PHS operator may accommodate their own database or management facilities. In this case, two data base are used with functional sharing depending to managing items. On the other hand, the independent network type will implement PHS in an independent switching network to connect the existing network via Inter-Network Interface. All of database and management facilities are implemented within the independent network.

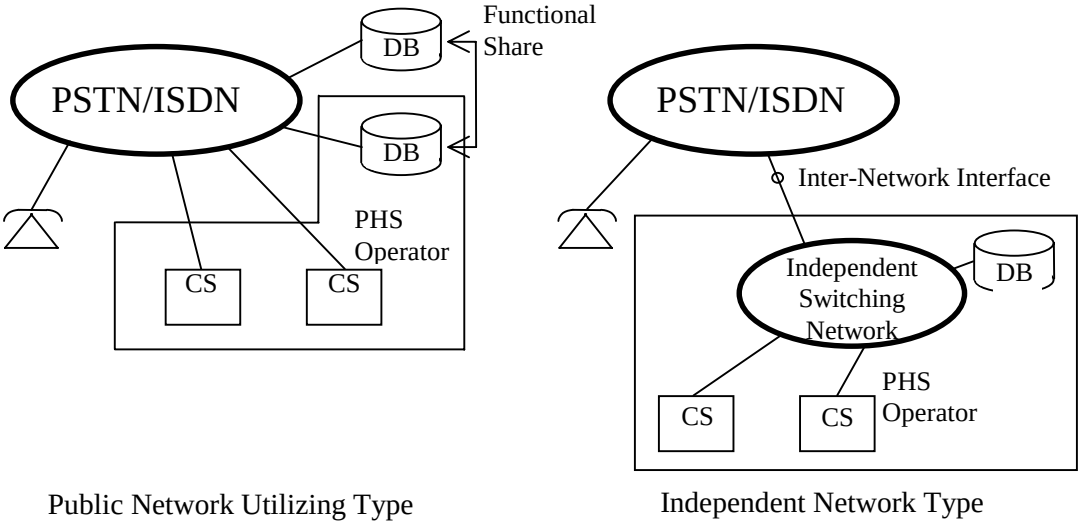

Figure 4-1/A-GN0.00 Public PHS Network Type

4.2 PHS Wireless Local Loop Access System

This section outlines the applications of the wireless local loop based on PHS. The PHS MOU Technical Document C-GNO.00 details the contents of this section. Figure 4-2/A-GN0.00 illustrates a wireless local loop configuration using PHS. The wireless local loop connects a conventional

telephone terminal or FAX, as Terminal Equipment (TE), to provide its user with the same ease of operation as before. Interface between TE and WLL Subscriber Unit (WSU) is almost equivalent to conventional wired telephone interface. At the same time, PHS WLL can accommodate WLL Personal Station (WPS) for limited mobile application as well. Interface between WLL Cell Station (WCS) and WSU or WPS (WIF2) is based on RCR STD-28 CAI. The wireless local loop connects with the existing Public Switched Telephone Network (PSTN) or ISDN via WLL Access Controller (WAC), which implements the functions including location registration and authentication that are required for the wireless section of PHS WLL. PHS WLL will use a standard interface such as V5.2 to work with the existing network at WIF3.

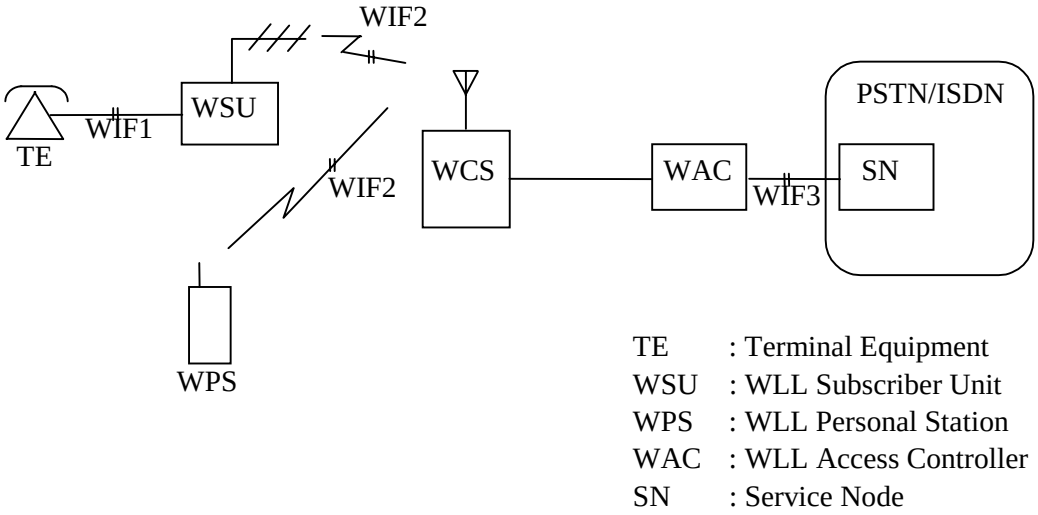

Figure 4-2/A-GN0.00 PHS WLL Architecture

4.3 Private PHS

For further study

4.4 Access System to PLMN

For further study

5. Outline of PHS MoU Technical Documents

This section outlines PHS MoU technical documents. PHS MoU technical documents consist of Technical Specifications (TSs) and Technical Reports (TRs). Technical Specifications are documents which provide specifications related to PHS. On the other hand, Technical Reports are document which provides technical information related to PHS.

Document number structure of PHS MoU technical documents and the meaning of each element are as follows.

Document number structure : A-BBX.XX-CC-DD

A : Segmentation of documents

- A : PHS General Description
- B : PHS Public system
- C : PHS Wireless Local Loop System (PHS-WLL System)

BB : Sub-segmentation of documents

- GN : General
- SV: Service
- IF : Interface
- IW : Internetworking
- HI : Human Interface

X.XX : Numeral number

CC : Version number

DD : Document Type

- TS : Technical Specification (TS)
- TR : Technical Report (TR)

The elaborated Technical Specifications and Technical Reports are listed in A-GN2.00-cc-TR "Document List of PHS MoU Technical Specifications and Technical Reports".

ABBREVIATIONS

ADPCM	Adaptive Differential Pulse Code Modulation
ARIB	Association of Radio Industries and Businesses
CAI	Common Air Interface
CCS	Common Channel Signaling
CS	Cell Station
IN	Intelligent Network
NNI	Network-Network Interfaces
PIAFS	PHS Internet Access Forum Standard
PHS	Personal Handy-phone System
PS	Personal Stations
PSC	PHS Switching Center
PSTN	Public Switched Telephone Network
SCP	Service Control Point
TDD	Time Division Duplex
TDMA	Time Division Multiple Access
TE	Terminal Equipment
UNI	User-Network Interface
WAC	WLL Access Controller
WCS	WLL Cell Station
WLL	Wireless Local Loop
WPS	WLL Personal Station
WSU	WLL Subscriber Unit

Note

Each group of terms written below as an example is used in this document without strict definition. The terminology is to be discussed by the TWG (Technical Working Group) under the PHS MoU Group.

1. Digital cordless Telephone (System)
   Mobile Communication System
2. PBX Wireless
   Wireless PBX
3. Home Cordless
   Home Cordless Telephone (System)