PHS MoU Document
B-GN0.00-01-TS

Title: **Public Personal Handy-phone System : General Description**

Version: 01

Date: April 21, 1997

PHS MoU Classification: Unrestricted

List of contents:

Number of pages: 7

PHS MoU Group

c/o Association of Radio Industries and Businesses (ARIB)
14F, Nittochi Bldg., 4-1, Kasumigaseki 1-choume, Chiyoda-ku, Tokyo 100, Japan
TEL +81-3-5510-8599 FAX +81-3-3592-1103

PHS MoU Document
B-GN0.00-01-TS

History of Revised Versions

Version	Date	Outline
01	April 21, 1997	Established

B-GN0.00-01-TS

Public Personal Handy-phone System: General Description

Contents

This document describes general view of Public Personal Handy-phone System.

1. Introduction

PHS (Personal Handy-phone System) is a new concept of communication system that provides an economical wireless access services based on the concept of “anytime and anywhere” for personal communications. Various applications are taken into consideration in its technical standards, such as Public Digital Cordless Telephone, Wireless Local Loop, PBX (Private Branch eXchange) Cordless, Home Cordless and Transceiver. This document describes Public Digital Cordless Telephone, i.e., Public PHS.
Public PHS is designed to realize the concept of Public Digital Cordless Telephone, such as high quality two way communications, wireless multimedia communications, terminal mobility and alternative access method to networks, e.g., PSTN (Public Switched Telephone Network)/ISDN (Integrated Services Digital Network) and PLMN (Public Land Mobile Network).

2. Public PHS

The configuration of basic public PHS network is shown in Figure 2-1/B-GN0.00. The basic public PHS network consists of PS (Personal Station), Public CS (Cell Station), PSC (PHS Switching Center) and SCP (Service Control Point). The basic functions of PHS network are CCF (Call Control Function), SSF (Service Switching Function), SCF (Service Control Function) and SDF (Service Data Function). The air interface between PSs and Public CSs is standardized as RCR STD-28 of ARIB (Association of Radio Industries and Business).

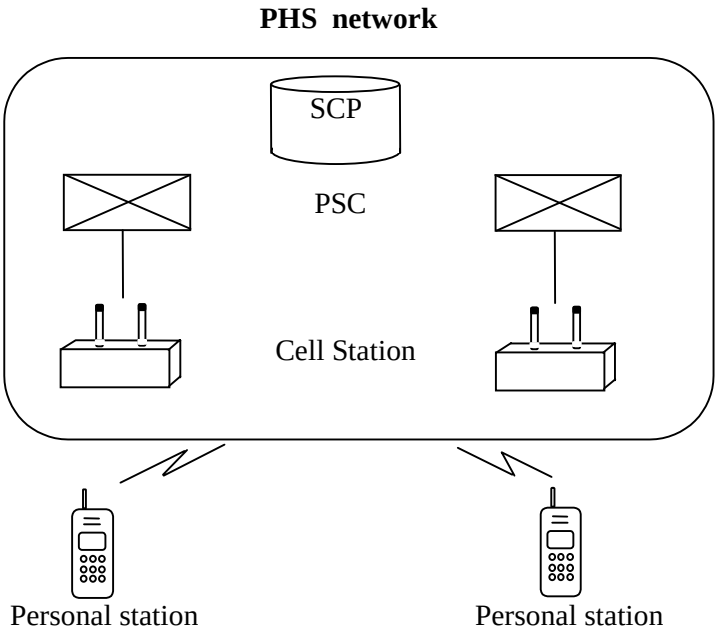

Figure2-1/B-GN0.00 Basic Public PHS network

2.1 Basic Functional Architecture

The four interface reference points for the public PHS network (IF1•4) are shown in Figure 2-2/B-GN0.00. Definitions of these interface reference points are as follows.

(i) IF1 is the PHS Common Air Interface.
(ii) IF2 is the Public CS - Network Interface.
(iii) IF3 is the Network - Network Interface for CC (Call Control).
(iv) IF4 is the Network - Network Interface for SCP (Service Control Point) Exchange. This interface is used for roaming procedure.

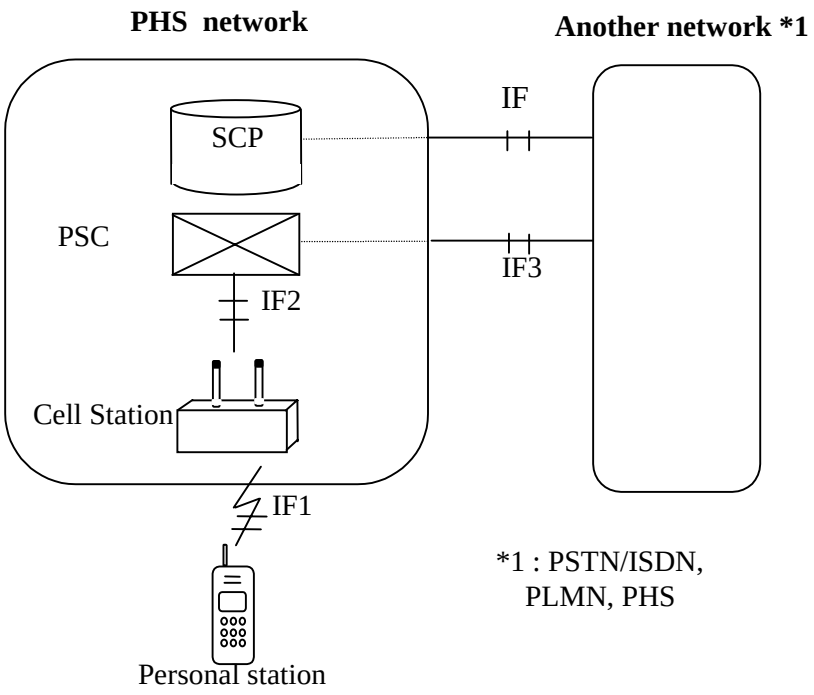

Figure2-2/B-GN0.00 Interface Reference Points

2.2 IF1 : PHS Common Air Interface

The PHS Common Air Interface is a radio interface between PS and Public CS. The specifications are described in B-IF1.xx series, which are based on RCR STD-28.

2.3 IF2 : Public CS - Network Interface

IF2 is the reference point of interface between Public CS and CCF in PHS switching network. The specifications are described in B-IF2.xx series.

2.4 IF3 : Network - Network Interface for Call Control

IF3 is the reference point of the CCF-CCF interface between Networks. ISUP (ISDN User Part) of Signaling System No.7 is used. The specifications are described in B-IF0.xx and B-IF3.xx series.

2.5 IF4 : Network - Network Interface for SCP Exchange

IF4 is the reference point of the SDF-SDF interface between Networks. INAP (Intelligent Network Application Protocol) of Signaling System No.7 is used. The specifications are described in B-IF0.xx and B-IF4.xx series.

3. Service Aspects

The specifications for Public PHS services, described in B-SVx.xx series, are summarized in this section.

A Public PHS subscriber can communicate with not only Public PHS subscribers, but also other PSTN/ISDN/PLMN subscribers. Every Public PHS subscriber is assigned a unique identification number. The numbering plan should follow ITU-T Recommendation E.164 in order to enable the Public PHS subscriber to interconnect with PSTNs/ISDNs/PLMNs, whose domestic numbering plans depend on each administration.
Bearer services provided by Public PHS are speech, 3.1kHz audio and unrestricted digital.
Teleservices provided by Public PHS are put for further study.
In addition to the basic services, various supplementary services would be provided in Public PHS. A Public PHS subscriber may need pre-arranged subscription to the Public PHS service provider for the supplementary services.
Public PHS supports roaming, such as a Public PHS subscriber moving around in areas where Public PHSs are available. A Public PHS subscriber may need pre-arranged subscription to the Public PHS service provider for the roaming services.

4. System Aspects

The Public PHS system configurations, described in B-NWx.xx series, are summarized in this section.

Public PHS is generally used as an access method for PSTN/ISDN. These types of network are illustrated in Figure 4-1/B-GN0.00 and Figure 4-2/B-GN0.00.
In case of the Public PHS network integrated with IN-structured PSTN/ISDN, the existing network operators can easily construct a wireless telecommunications network by introducing Public PHS.

There are two types of interworking between PHS network and other network. One is to connect directly, the other is to connect via transit network. The concept of interworking with other networks is illustrated in Figure 4-3/B-GN0.00. The specifications for interworking with other networks are described in B-IWx.xx series.

In order to allow a Public PHS subscriber, i.e., PS, to move around, Public PHS service providers have to provide, so called, mobility functions such as location registration function, authentication function, handover function and paging function.

Some network elements are introduced into Public PHS network to meet the requirements mentioned above. A network element called VLR (Visited Location Register) is introduced into Public PHS network for providing roaming services as illustrated in Figure 4-4/B-GN0.00. When a Public PHS subscriber roams into other network, VLR is temporarily created while the roamer stays in the visiting network by getting the subscriber data from HLR (Home Location Register). Public PHS has adopted CCS (Common Channel Signaling) No.7 ISUP signaling and INAP signaling. ISUP signaling follows ITU-T Recommendations. It is also considered sufficient that INAP signaling will follow ITU-T Recommendations.

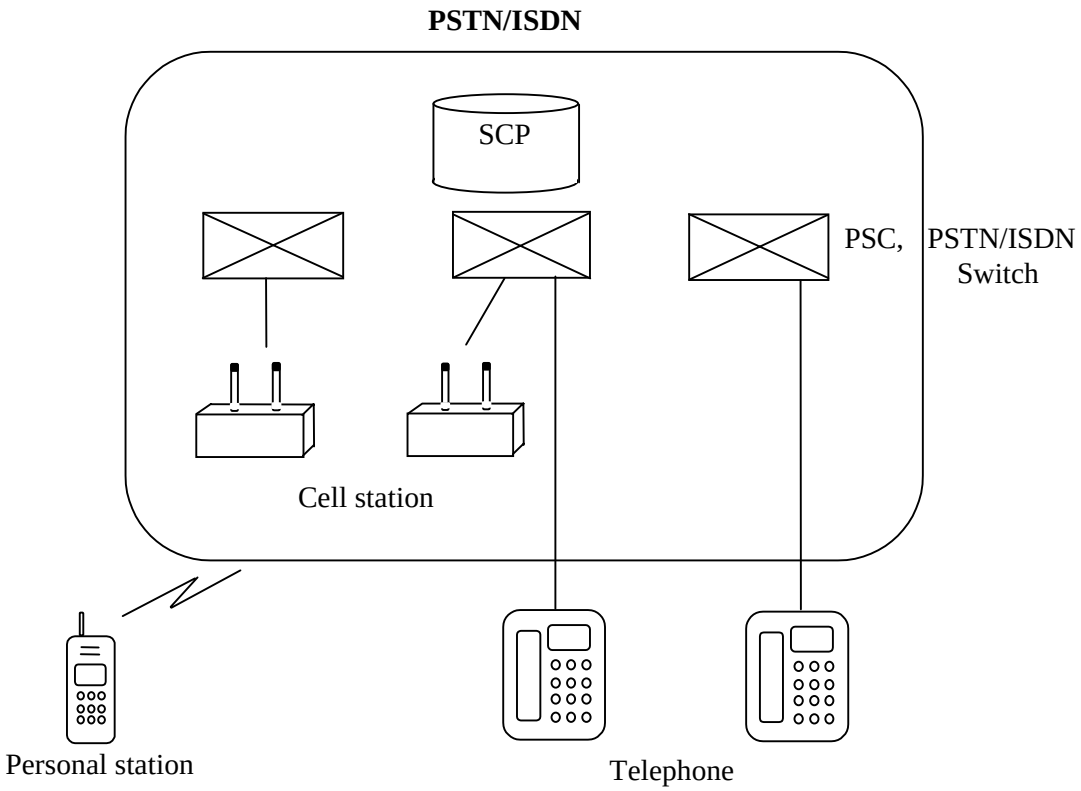

Figure4-1/B-GN0.00 IN-structured PSTN/ISDN with PHS

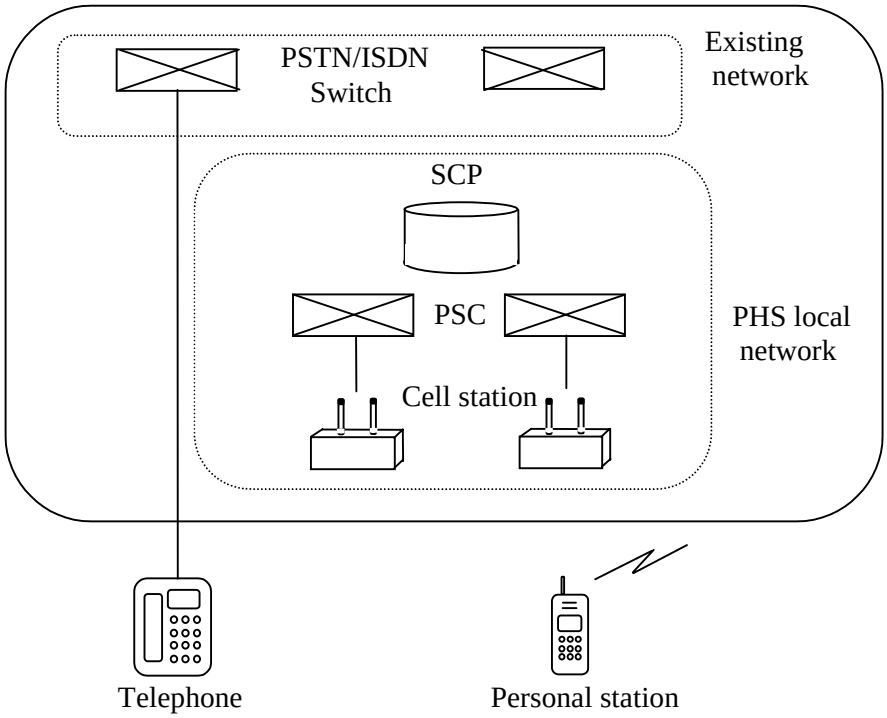

Figure4-2/B-GN0.00 Non-IN structured PSTN-ISDN

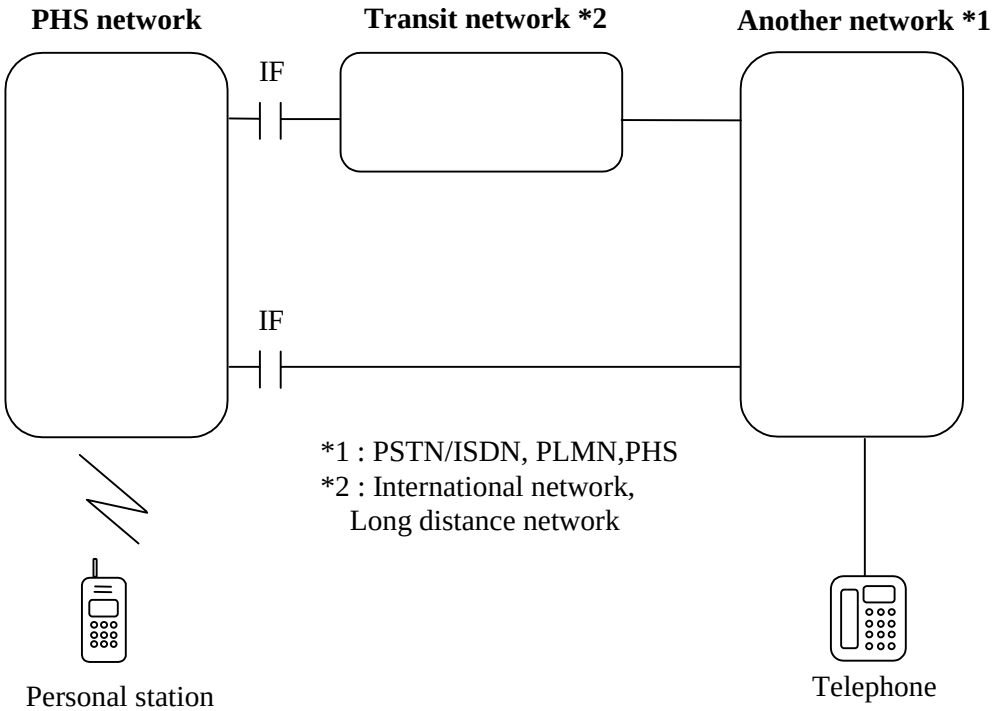

Figure4-3/B-GN0.00 Internetworking with other networks

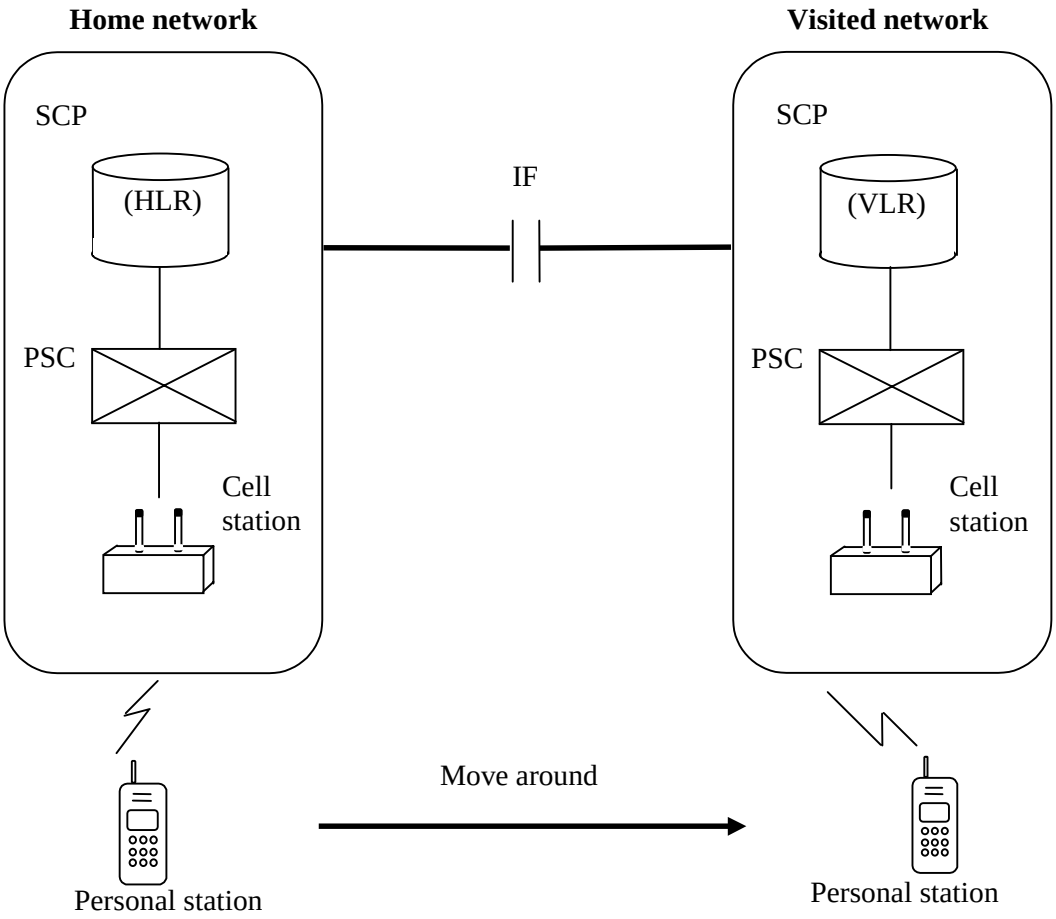

Figure4-4/B-GN0.00 Outline of roaming

ABBREVIATIONS

ARIB	Association of Radio Industries and Business
CC	Call Control
CCF	Call Control Function
CCS	Common Channel Signaling
CS	Cell Station
H.O.	Handover
HLR	Home Location Register
IN	Intelligent Network
INAP	IN Application Protocol
ISDN	Integrated Services Digital Network
ISUP	ISDN User Part
ITU-T	International Telecommunication Union - Telecommunication Standardization Sector
LE	Local Exchange
OSI	Open Systems Interconnection
PBX	Private Branch eXchange
PHS	Personal Handy phone System
PLMN	Public Land Mobile Network
PS	Personal Station
PSC	PHS Switching Center
PSTN	Public Switched Telephone Network
RPOA	Recognized Private Operating Agency
SCF	Service Control Function
SCP	Service Control Point
SDF	Service Data Function
SSF	Service Switching Function
TTC	The Telecommunication Technology Committee
VLR	Visited Location Register

Note

Each group of terms written below as an example is used in this document without strict definition. The terminology is to be discussed by the TWG (Technical Working Group) under the PHS MoU Group.

1. Digital cordless Telephone (System)
   Mobile Communication System
2. PBX Wireless
   Wireless PBX
3. Home Cordless
   Home Cordless Telephone (System)