PHS MoU Document
B-NW 0.00-04-TS

Title: Public Personal Handy-phone System : General Description of Network and System Configurations
Version: 04
Date: December 19, 1997
PHS MoU Classification: Unrestricted
List of contents:

<Summary>
1. Relation with international standards
2. Differences from ITU-T Recommendation
3. References
4. Items for Further Study

<Text>
1. General
   1.1 Objective of this document
   1.2 Structure of network document
2. Scope of current network and system configurations for public PHS network
   2.1 General
   2.2 Basic public PHS network
   2.3 Public PHS network integrated with non-IN structured PSTN/ISDN
   2.4 Internetworking with other networks
   2.5 Internetworking between public PHS networks
3. Numbering plan and identification Codes for public PHS
   3.1 Definition of number and identification Codes
   3.2 PHS number
   3.3 International PS identification code
   3.4 International CS identification code
   3.5 PHS Roaming Number
4. Future directions

Annex A GLOSSARY and ABBREVIATIONS

Number of pages: 25

PHS MoU Group

c/o Association of Radio Industries and Businesses (ARIB)
14F, Nittochi Bldg., 4-1, Kasumigaseki 1-choume, Chiyoda-ku, Tokyo 100, Japan
TEL +81-3-5510-8599 FAX +81-3-3592-1103

History of Revised Versions

Version	Date	Outline
01	17 April 1996	Established as follows. Document No. : NW0.00 Document Title : Summary of Personal Handy-Phone system
02	17 Dec. 1996	This version is the overall revised version of the above-mentioned NW0.00.
03	11 July 1997	Clause 3 and Clause 4 are changed.
04	19 Dec. 1997	Sub-clause 3.5 PHS Roaming Number is added. Glossary and abbreviations are aligned with A-GN1.00 (Glossary and Abbreviations)

B-NW0.00-04-TS

Public Personal Handy-Phone System:
General Description of Network and System Configurations

<Summary>

1. Relation with international standards

This document refers to ITU-T Recommendation E.164.

2. Differences from ITU-T Recommendation

None

3. References

ITU-T Recommendation E.160
ITU-T Recommendation E.164
ITU-T Recommendation E.166
ITU-T Recommendation E.212

4. Items for Further Study

(1) Application of IN CS-3 modelling and relation to IMT2000
(2) Public PHS network attached to PLMN
(3) Roaming service between public PHS network and PLMN

B-NW0.00-04-TS

Public Personal Handy-Phone System:
General Description of Network and System Configurations

Contents

1. General 1
   1.1 Objective of this document 1
   1.2 Structure of network document 1
2. Scope of current network and system configurations for public PHS network 2
   2.1 General 2
   2.2 Basic public PHS network 2
      2.2.1 Objectives 2
      2.2.2 General description and definition 2
   2.3 Public PHS network integrated with non-IN structured PSTN/ISDN 5
      2.3.1 Objectives 5
      2.3.2 General description and definition 5
   2.4 Internetworking with other networks 7
      2.4.1 Objectives 7
      2.4.2 General description and definition 7
   2.5 Internetworking between public PHS networks 8
      2.5.1 Objectives 8
      2.5.2 General description and definition 8
3. Numbering plan and identification Codes for public PHS 11
   3.1 Definition of number and identification Codes 11
   3.2 PHS number 12
   3.3 International PS identification code 15
   3.4 International CS identification code 16
   3.5 PHS Roaming Number 17
      3.5.1 One Number per Network 18
      3.5.2 One Number per roaming PS 18
      3.5.3 one temporary number at call origination to roaming PS 19
4. Future directions 21

Annex A GLOSSARY and ABBREVIATIONS 22

1. General

1.1 Objective of this document

This document describes outlines of the network models and the network functions of the public PHS network which is based on the Intelligent Network (IN) architecture. The public PHS network is defined as the network which supports location registration, terminal authentication and service provision for the public personal stations and includes the cell stations.

The functional architecture, the physical architecture of the public PHS network model according to the ITU-T Recommendations relating to the IN CS-2, and the interface reference points are described in the other document. The descriptions relating to the application of IN CS-3 modelling and the relation to FPLMTS, the public PHS network attached to the PLMN, and the roaming service between the public PHS network and the PLMN are subjects for further study.

1.2 Structure of network document

This subclause describes the general information about B-NWx.xx series documents of PHS MoU group. The current B-NWx.xx series documents are structured as follows.

B-NW0.00 : General Description of Network and System Configuration

This document includes the general information, outlines of the network models and the network functions.

B-NW1.00 : Network and System Configuration

This document includes the general information, definition of the functional architecture, the physical architecture according to the ITU-T Recommendations relating to the IN CS-2, and the interface reference points for public PHS network.

The B-IFx.xx series documents will specify the protocol specifications at the interface reference points defined by the B-NW1.00 document.

The B-IWx.xx series documents will specify the interworking rules between the signalling protocols which are used each side of the interworking function for the call related signalling or the call unrelated signalling.

2. Scope of current network and system configurations for public PHS network

2.1 General

This subclause describes the current scope of network and system configurations which provide the public PHS services and the broader connectivity to public PS by mean of internetworking between the public PHS network and the other networks.

Basic public PHS network is intended to model functionality and physical arrangement. This model is dedicated to support public PHS services.

There are following areas of scope based on the basic public PHS network:

(i) Integration with other networks
A basic public PHS network can be integrated with IN or non-IN structured PSTN/ISDN.

(ii) Internetworking with other networks
There are two type of the internetworking between the public PHS network and the other networks. In the first case, calls between PHS subscriber and other network subscriber are provided through internetwork connection between public PHS network and other networks. In the second case, the internetworking provides roaming service. Other possible case is the internetworking provides roaming service between public PHS network and PLMN. This case is for further study.

2.2 Basic public PHS network

2.2.1 Objectives

The basic public PHS network is intended to represent to the case where the PHS service provider needs to introduce PHS networks without having existing other networks.

2.2.2 General description and definition

Basic public PHS network model defines the entire functionality and possible physical arrangements required for public PHS services provision by itself.

The configuration of this basic public PHS network is shown in Figure 2-1/B-NW0.00 . The PHS subscriber data and location information are stored in the SCP (Service Control Point), the PSC (PHS Switching Center) which provides public PHS service can utilize this information.

For the implementation of this basic public PHS network, integration with other IN-structured network, such as PSTN and ISDN, can be possible as shown in Figure 2-2/B-NW0.00.

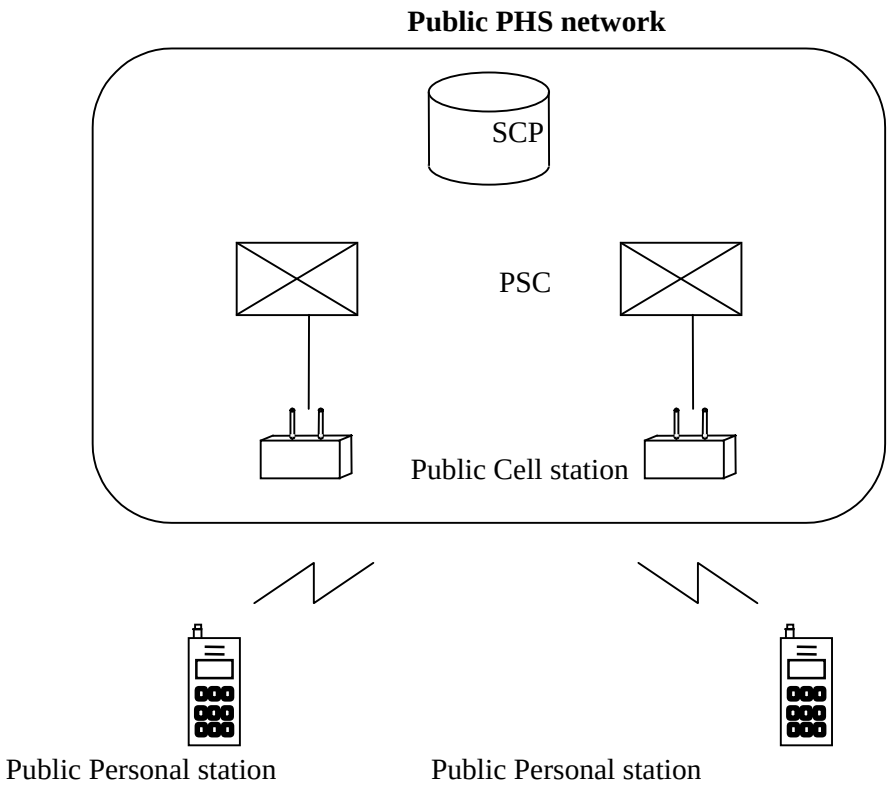

Figuer 2-1/B-NW0.00 Basic public PHS network

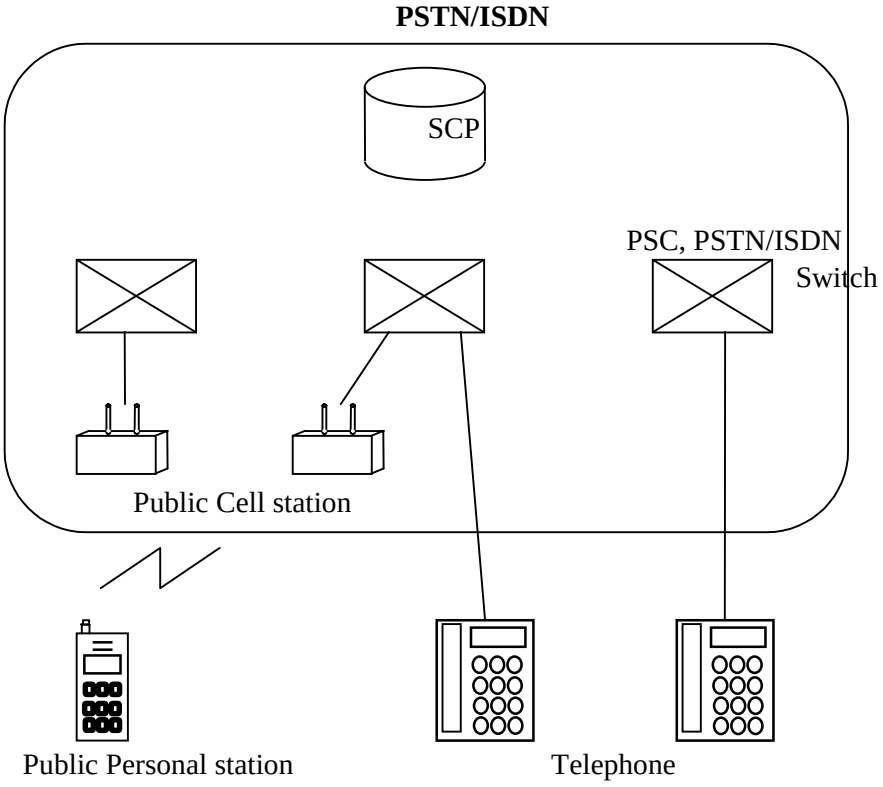

Figuer 2-2/B-NW0.00 IN-structured PSTN/ISDN with PHS

For example, the outline of the routing processes by the basic public PHS network are shown in Figure 2-3/B-NW0.00 and general process in principle, is as follows:

(a) Personal station number-1 (PS#1) requests a call to personal station number-2 (PS#2).

(b) PSC#1 accesses to the SCP to get the subscriber data for PS#1 (including the authentication data) and the location information of PS#2.

(c) PSC#1 routes a call to PSC#2 where PS#2 is locating according to the information received from the SCP.

(d) PSC#2 retrieves the subscriber data for PS#2 (including the authentication data) from the SCP.

(e) A call is offered to PS#2 from PSC#2.

Public PHS network

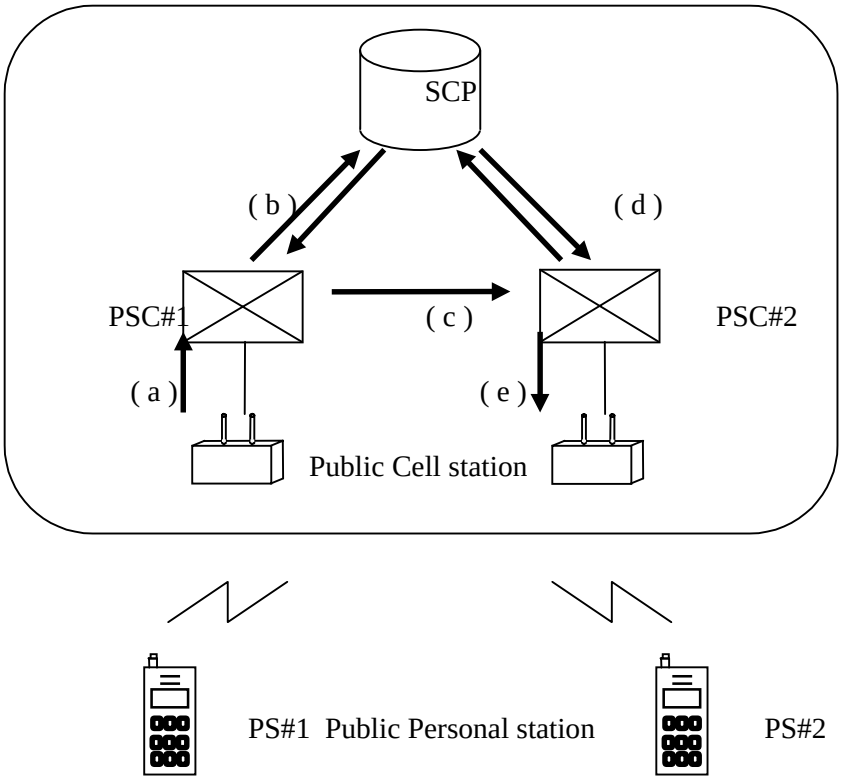

Figure 2-3/B-NW0.00 Outline of call in Basic public PHS network

2.3 Public PHS network integrated with non-IN structured PSTN/ISDN

2.3.1 Objectives

This case is intended to cover that public PHS service provider needs to introduce PHS local networks to the non-IN structured PSTN/ISDN. In this case, basic public PHS network is attached to existing PSTN/ISDN.

2.3.2 General description and definition

Public PHS network integrated with non-IN structured PSTN/ISDN model defines the entire functionality and possible physical arrangements required for public PHS services provision to be attached to the existing non-IN structured PSTN/ISDN.

The configuration of this network shown in Figure 2-4/B-NW0.00. The additional PHS local network elements for the provision of PHS services are the PSC and the SCP. Only the PSC can control a call to/from PHS subscribers and location registration. All calls to be routed to public PS must pass through the PSC which can access the SCP containing location information for the public PS. The PSC serves as overlay transit exchange for a call from PSTN/ISDN while it serves as local exchange for a call to/from public PS. A call to other network is routed through the existing PSTN/ISDN.

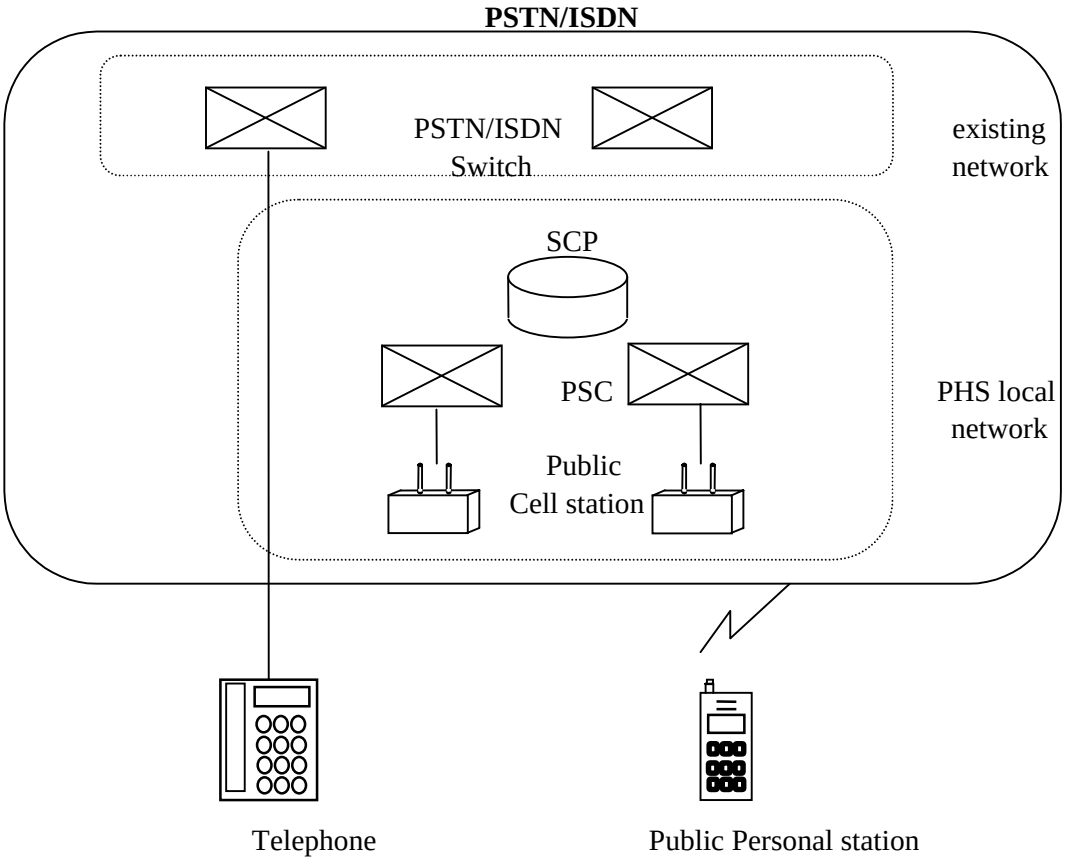

Figure 2-4/B- NW0.00 Non-IN structured PSTN/ISDN

For example, the outline of procedures for routing in Non-IN structured PSTN/ISDN is shown in Figure 2 -5/B-NW0.00 and general process ,in principal, is as follows:

(a) A PSTN/ISDN subscriber requests a call to the public personal station (public PS).

(b) The originating local exchange to that PSTN/ISDN routes a call to the PSC.

(c) The PSC#1 accesses to the SCP to get the location information of public PS.

(d) The PSC#1 routes a call through the PSTN/ISDN to the PSC#2 where terminating public PS is locating.

(e) PSC#2 retrieves the subscriber data for public PS (including the authentication data) to the SCP.

(f) A call is offered to public PS from PSC#2.

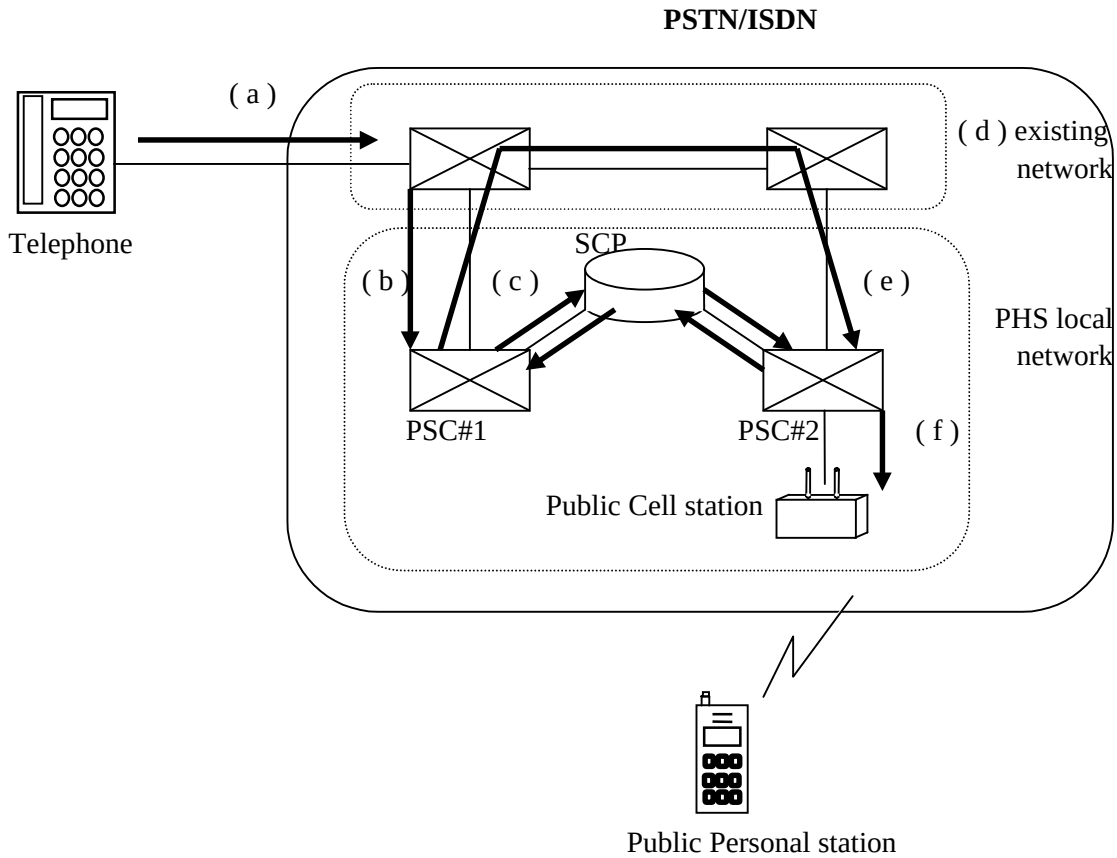

Figure 2-5 /B-NW0.00 Outline of incoming call in Non-IN structured PSTN/ISDN

2.4 Internetworking with other networks

2.4.1 Objectives

This case is intended to support the internetworking between PHS network and other networks in order to provide the broader connectivity to the public PS. This internetworking enables to connect a call between the public PS subscribers and the subscribers of other networks such as PSTN/ISDN, PLMN and PHS. Roaming of public PS is out of the scope of this case.

2.4.2 General description and definition

Internetworking of public PHS network with other network defines the entire functionality and possible physical arrangements required to provide the connectivity between public PS and terminal in other networks.

There are two types of the internetworking between PHS network and the other network. First is to connect directly, second is to connect via transit network; international network and long distance network as shown in Figure 2-6/B-NW0.00.

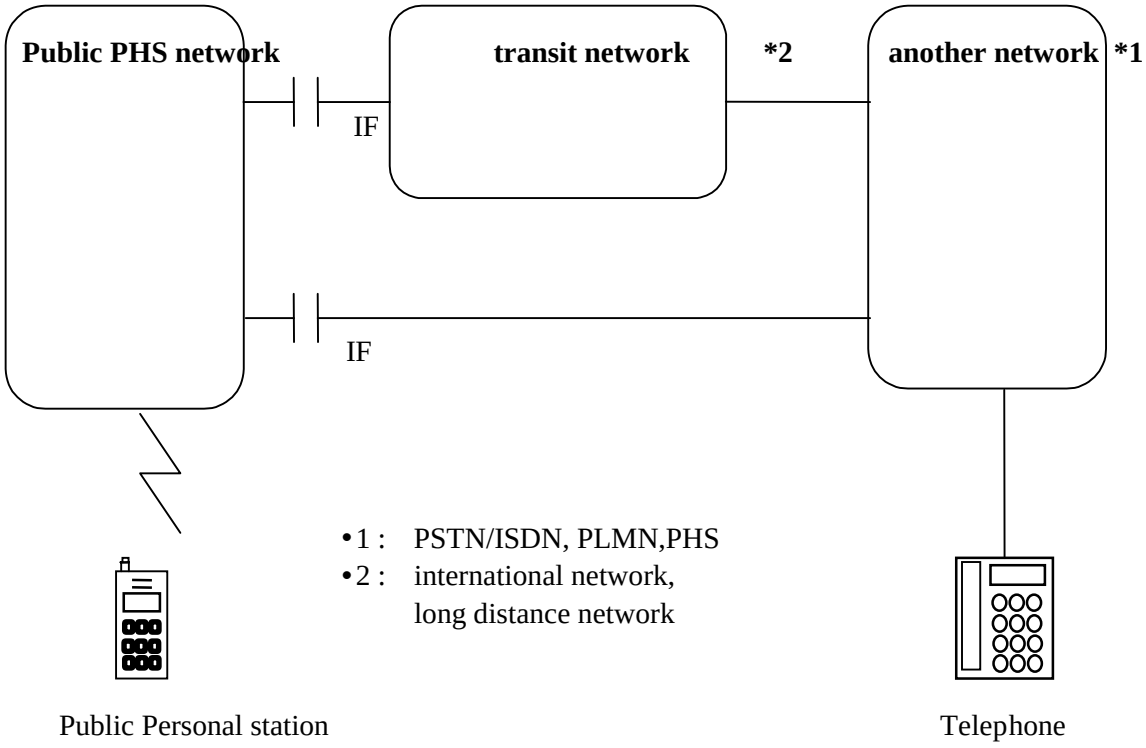

Figure 2-6/B-NW0.00 Internetworking with other networks

2.5 Internetworking between public PHS networks

2.5.1 Objectives

This case is intended to support telecommunications between public PSs in different public PHS networks and roaming of public PS between public PHS network..

2.5.2 General description and definition

Internetworking between public PHS networks defines the entire functionality and possible physical arrangements required to provide the connectivity between public PSs in different public PHS networks and the roaming of public PS between public PHS networks.

Outline of network configuration for roaming is shown in Figure 2 -7/B-NW0.00 and general process how the roaming environment for public PS is provided is as follows:

When a public PS roams to other public PHS network, VLR (visited location register) is temporally created by transferring the copy of subscriber data for interested public PS in the HLR (home location register) for a while the roamed public PS is in the visited public PHS network.

The routing schemes to route a call to roamed public PS are through home public PHS network and redirection. The outline of these schemes is shown in Figure 2-8/B-NW0.00 and general process is as follows:

(a) Through home network

An originating network connects an originating call to the home network, and the home network connects the call further to a visited network based on the visited network information stored in the home network, In this case, the channel is continuously connected through home network.

(b) Redirection

An originating network connects an originating call to the home network, and the home network requests redirection to the originating network by clearing connection, and the originating network again connects the call directly to the visited network based on the visited network information contained in the release message. In this case, the routing of the channel is changed to become a shorter route.

(c) Look ahead (for further study)

An originating network accesses the home network and receives the visited network information before routing a call, and connects an originating call directly to a visited network. This routing scheme can effectively use circuit resources,but is subject to further study.

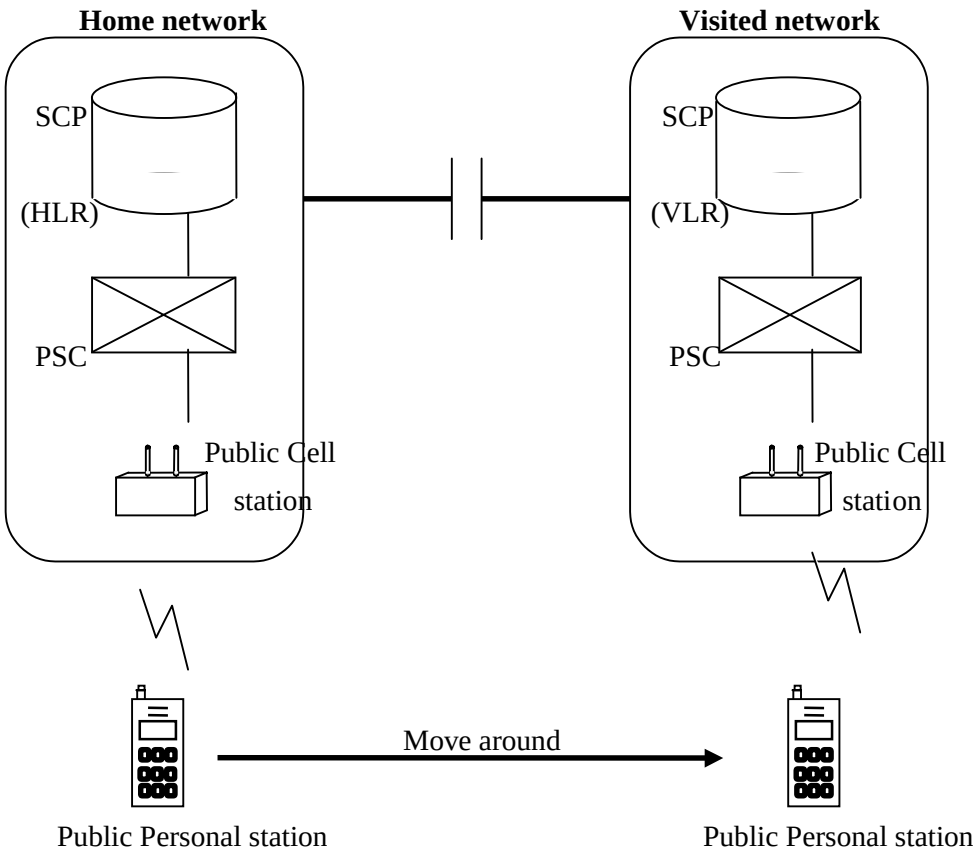

Figure 2-7/B-NW0.00 Outline of roaming

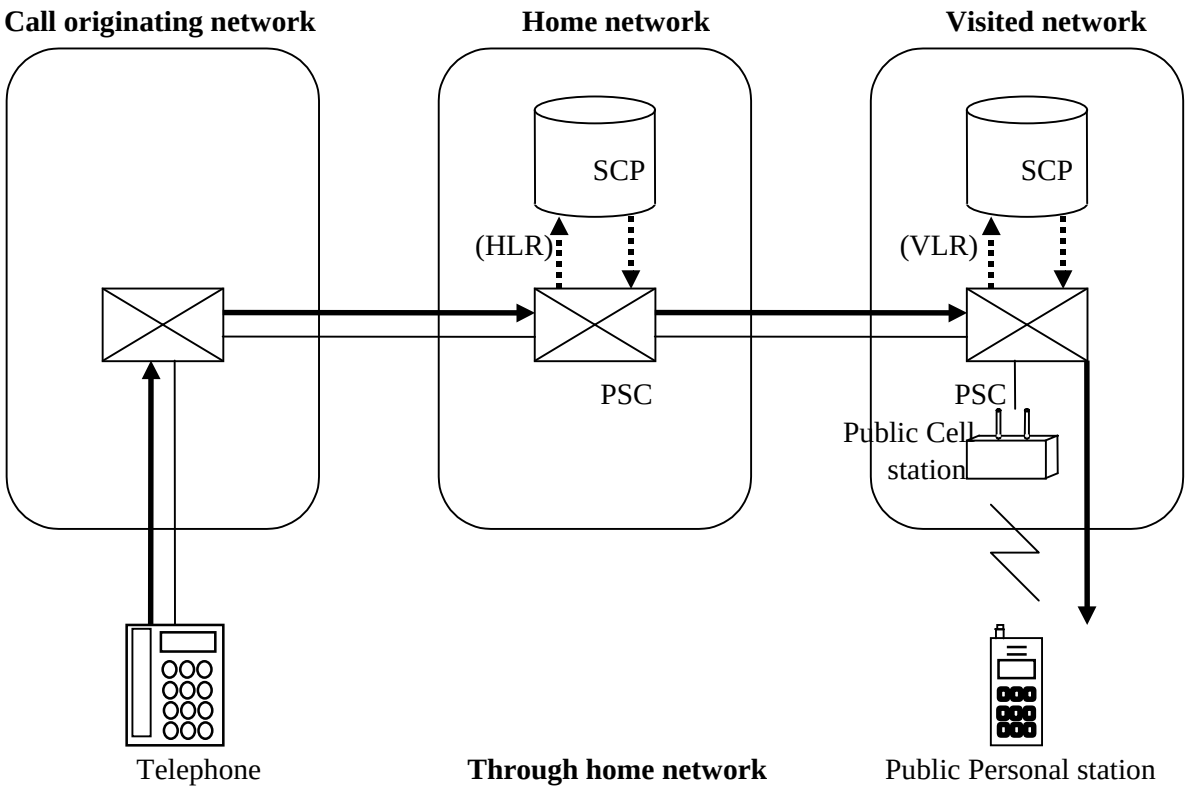

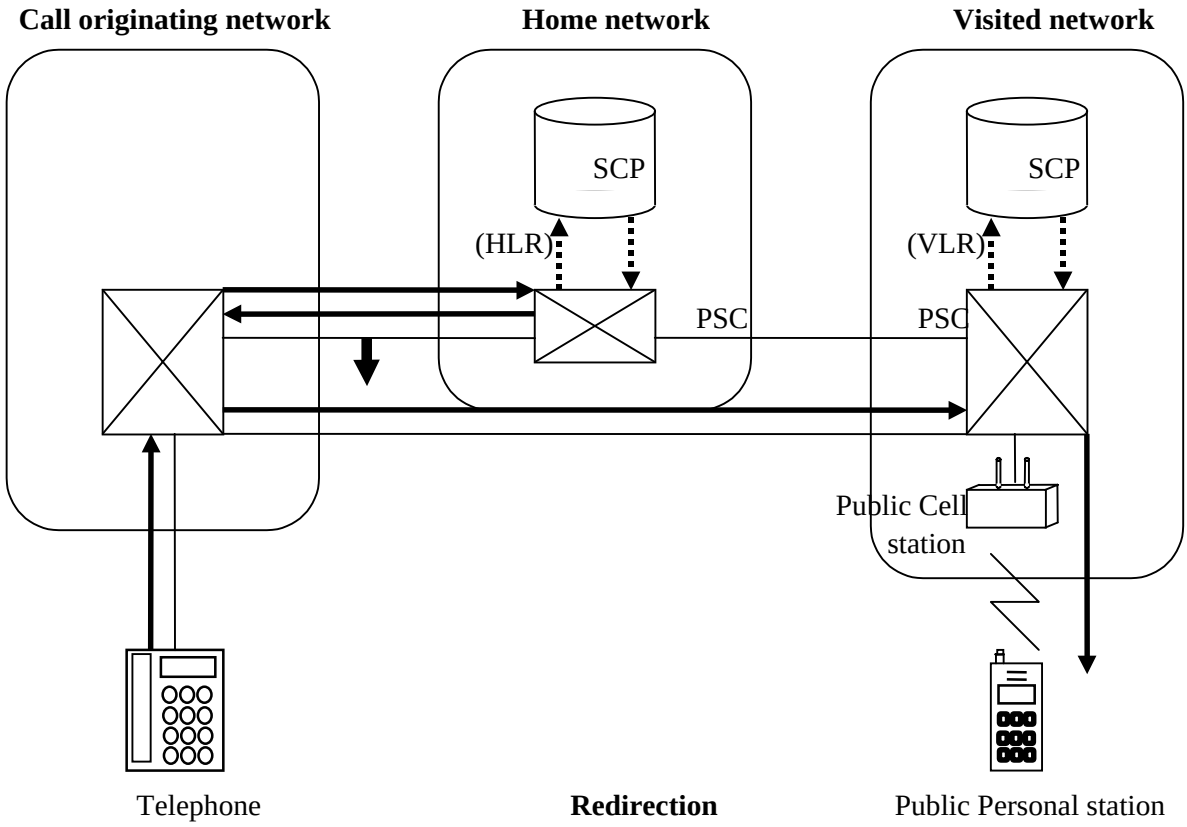

Figure 2-8/B-NW0.00 Routing schemes to the visited network

3. Numbering plan and identification codes for public PHS

3.1 Definition of number and identification Codes

PHS number is used for identifying PHS subscriber. PHS number can be dialed by the user who originates call to the public PS.

PHS number is used throughout the public PHS network. The valid domain of PHS number is shown in Figure 3-1/B-NW0.00.

PS identification code is used for identifying public PS in the air interface. PS identification code is not recognized by the user. PS identification code is used only in the air interface. The valid domain of PS identification code is shown in Figure 3-1/B-NW0.00.

International CS identification code is used for identifying public CS in the air interface. International CS identification code is not recognized by the user. International CS identification code is used only in the air interface. The valid domain of International CS identification code is shown in Figure 3-1/B-NW0.00.

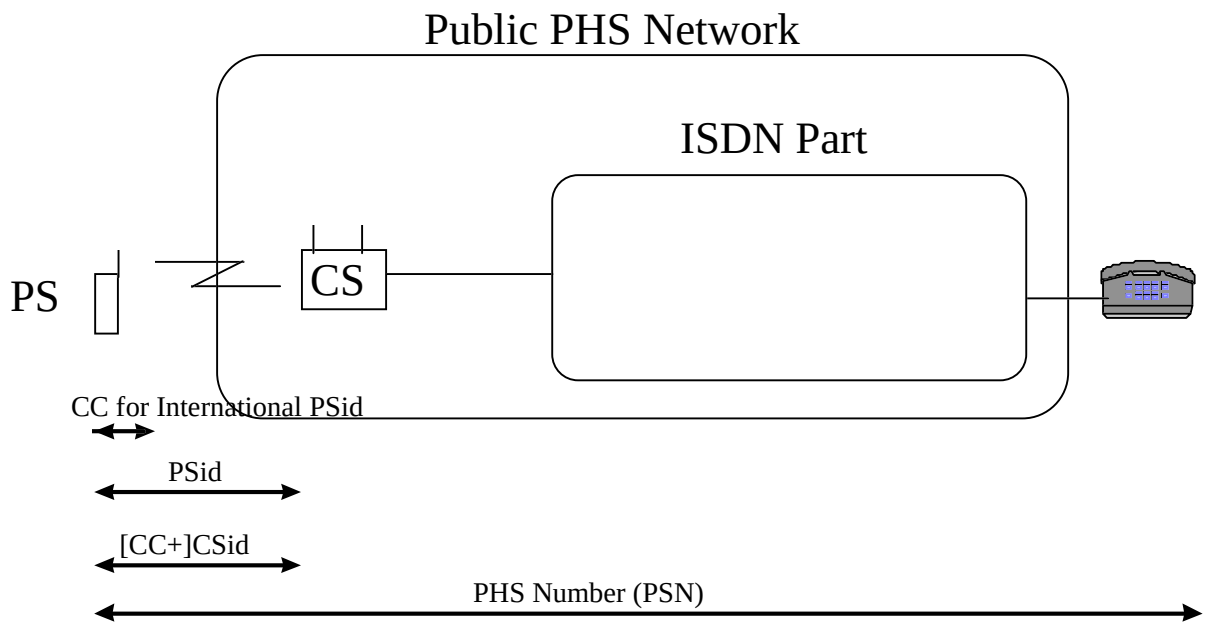

Figure 3-1/B-NW0.00 Public PHS network configuration and valid domain of number and ids

3.2 PHS number

The format of it should comply with the numbering plan described in the ITU-T Recommendation E.164. The number structure is shown in Figure 3-2/B-NW0.00.

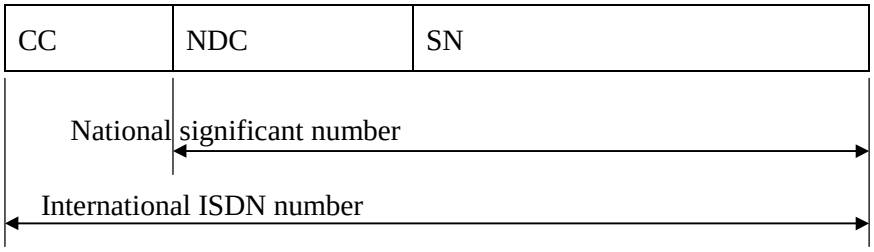

CC Country code as defined by Recommendation E.164
NDC National destination code
SN Subscriber number

Figure 3-2/B-NW0.00 E.164 number structure

The 10 types of character set 0-9 is used throughout the ISDN numbering plan format including subscriber number, national (significant) number and the country code.

The international number may be of variable length. The maximum number length shall be 15 digits. However, some Administrations may wish to increase their register capacity to 16 or 17 digits. The decision on register capacity is left as a matter to be taken by individual Administrations. The length does not include prefixes, language digit, address delimiters (e.g., end of pulsing signals, etc.) since these items are not considered as part of the international ISDN number.

The NDC field will be variable in length depending upon the requirements of the destination country. The NDC can be used to select a destination Public PHS network serving the destination PHS subscribers. It may include the PHS service identification code. It must include the information to identify PHS operator to which the PHS subscriber subscribes.

The assignment of country codes is administered by ITU-T, while NDC plus SN code assignments are a national responsibility (FFS).

PHS subscribers will always be called by the same subscriber number irrespective of where in the network the call originates. For calls in the same numbering area or local network the subscriber number alone may be dialed. For national calls between numbering areas or local networks the subscriber number may be preceded by the national prefix and NDC. The use of prefixes shall be in accordance with Recommendations E.160, E.164 and E.166. Where necessary, prefixes can also be used for network and service selection.

PHS number is kept in the public network of the country where the public PS is registered. PHS number is associated with the location information and authentication information in the network.

PHS number is also kept in the public PS. PHS number is given to the public PS by the PHS operator.

The numbering type and numbering plan used in various cases are shown in Table 3-1/B-NW0.00. In the table, country A is the country where the public PS is registered, country B is the country where the opponent terminal (either a public PS or an existing terminal) is registered, country C is the country where the public PS is located, and country D is the country where the opponent terminal is located (see Figure 3-3/B-NW0.00).

Table 3-1/B-NW0.00 The numbering type and numbering plan used in various cases

Country where PS is used		C=A (domestic use)		C≠A (overseas use)
	Country where the opponent terminal is registered	B=A (intra-registration area use)	B≠A (inter-registration area use)	
origination from the PS or handover of the PS	calling party number	E.164/Domestic number or Undetermined/Undetermined		E.164/International number
	called party number	E.164/Domestic number	E.164/International number	E.164/International number
termination to the PS	calling party number	E.164/Domestic number	E.164/International number	E.164/International number
	called party number	E.164/Domestic number		E.164/International number
Paging message		Undetermined/Undetermined		E.164/International number (further study*1)
Location registration		Undetermined/Undetermined		E.164/International number (further study*1)
(for reference) Dial procedure		national prefix + national number	international prefix + country code + national number	international prefix + country code + national number (including B=C)

Notation explanation: Numbering plan identifier/Type of number
*1: issue on how to indicate national/international and contain more than 13 digits

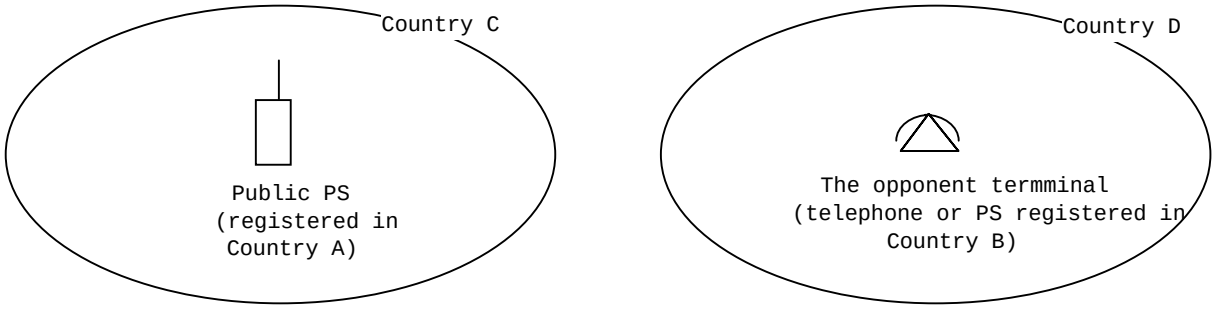

Figure 3-3/B-NW0.00 Registration and location model used in Table 3-1/B-NW0.00

3.3 International PS identification code

The structure of International PS identification code is shown in Figure 3-4/B-NW0.00.

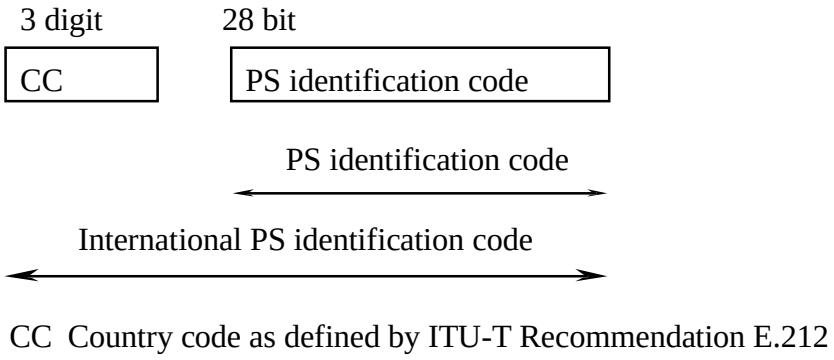

Figure 3-4/B-NW0.00 International PS identification code structure

CC is country code (CC) as defined by ITU-T Recommendation E.212. CC contains the country where the public PS is registered. The PS identification code is a set of 28 bits (0 or 1) and the length is fixed.

PS identification code is unique for the public PS in the registered country.

PS identification code is kept in the public PS. The PS identification code is also kept in the communicating public CS temporarily during the call. CC of international PS identification code is not necessary when the public PS remains in the registered country and for this reason some public PS does not keep CC of international PS identification code.

3.4 International CS identification code

The structure of international CS identification code is shown in Figure 3-5/B-NW0.00.

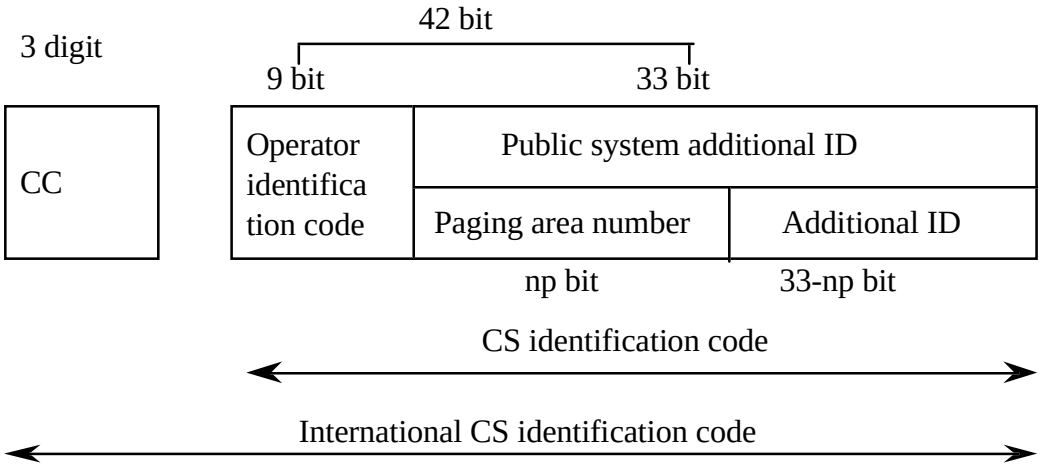

CC Country code as defined by ITU-T Recommendation E.212
np n for paging

Figure 3-5/B-NW0.00 International CS identification code structure

CC is country code as defined by ITU-T Recommendation E.212. CC contains the country where the public CS is registered. The CS identification code is a set of 42 bits (0 or 1) and the length is fixed. The first 9 bits of the CS identification code indicates the public PHS operator.

CS identification code is unique for the public CS in the registered country.

CS identification code is kept in the public CS. The operator identification code of CS identification code is kept in the public PS, while the other part of CS identification code is kept in the public PS temporarily while the public PS remains in the public CS zone. CC of international CS identification code is not necessary when the PHS operator provide services for domestic public PS, and for this reason some public CS and public PS does not keep CC of international CS identification code.

3.5 PHS Roaming Number

PHS roaming number is a number that the visited public PHS network assigns to a public PS which is roaming in that public PHS network. PHS roaming number is based on E.164
This sub-clause specifies the schemes for assigning PHS roaming number.
There are following three ways how to associate PHS roaming number to the public PS: i) one PHS roaming number is assigned to all public PSs which roam to that visited network; ii) one PHS roaming number is permanently assigned to individual public PS during roaming to that visited network; and iii) one PHS roaming number is temporarily assigned to a call to be terminated to roaming public PS to that visited network.

Note that inclusion of second way listed here and explained hereinafter is explanatory purpose only. Total specifications including protocol specification for this way may not be completed.

The characteristics of three ways are summarized in Table 3-2/B-NW0.00.

Table 3-2/B-NW0.00 Characteristics of Each Method of PHS Roaming Number Assignment

Method	Roaming number assignment method No. 1: one roaming number per network	one roaming number per roaming public PS	Roaming number assignment method No.2: one temporary roaming number at call origination to roaming public PS
Association	network (all PSs roamed to that visited network)	every public PS roamed to that visited network	every call to be terminated roaming public PS to that visited network
Assignment timing of PHS roaming number	when network starts the roaming service	when the public PS roams in the visited network	when the origination of a call to roamed public PS is informed to the visited network
Release timing of PHS roaming number	never released	when the public PS roams out to other network or move back to home network	when the call is delivered to roamed public PS in the visited network or expiration of guard timer
Capacity of PHS roaming number	**one** per network	**big** (reserve PHS numbers sufficient to maximum number of simultaneously roaming public PS to that visited network	**small** (reserve PHS numbers sufficient to maximum number of simultaneous calls to be terminated to roaming public PS to that visited network)
Identification of roamed public PS	PHS number (needs to be transferred between network in addition to PHS roaming number)	PHS roaming number	PHS roaming number

3.5.1 One Roaming Number per Network

In this case, one PHS roaming number is permanently assigned to visited network. All calls are routed to the visited network using one PHS roaming number. In addition to PHS roaming number, PHS number needs to be transferred to the visited network to identify which public PS terminates a call routed by PHS roaming number.

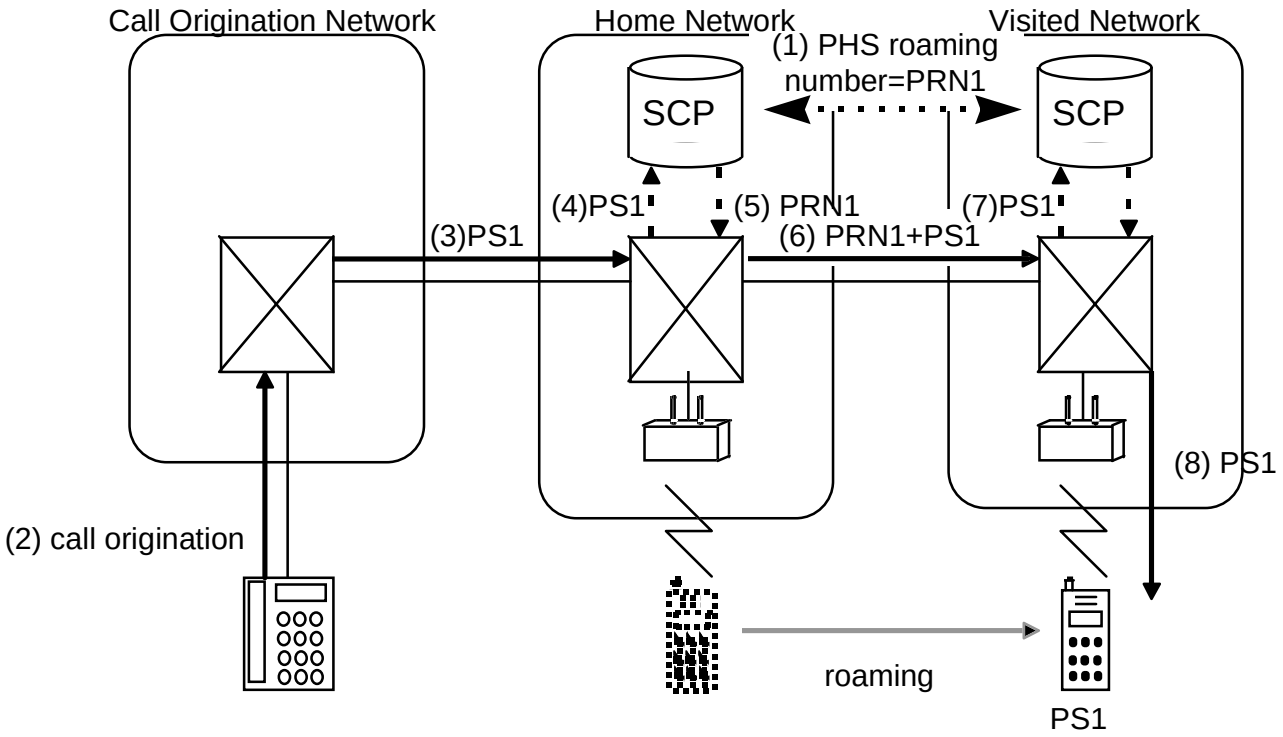

Figure 3-6/B-NW0.00 Example Procedure for routing a call using one PHS roaming number per network

(1) The visited network informs PHS roaming number (PRN1) which is assigned to all roaming public PSs when the PS1 requests the first location registration in the visited network.
(2) A call to the roaming public PS is originated.
(3) Call origination network routes a call to home network.
(4) The home network makes a query to the SCP to get location of designated public PS (in this case PS1).
(5) The SCP returns the PHS roaming number (PRN1).
(6) The PHS switching center routes a call to the visited network using PRN1 along with the PS1.
(7) The visited network decides a call is for roaming public PS by the PRN1, and makes a query with PS1 to the SCP to get location of roaming PS1
(8) The visited network delivers a call to PS1.

3.5.2 One Number per roaming public PS

Note that inclusion of second way listed here and explained hereinafter is explanatory purpose only. Total specifications including protocol specification for this way may not be completed.

In this case, one PHS roaming number is permanently assigned to individual roaming public PS during the roaming. All calls are routed to the visited network using PHS roaming number. PHS number needs not to be transferred to the visited network. The visited network can identify which public PS terminates a call routed by PHS roaming number.

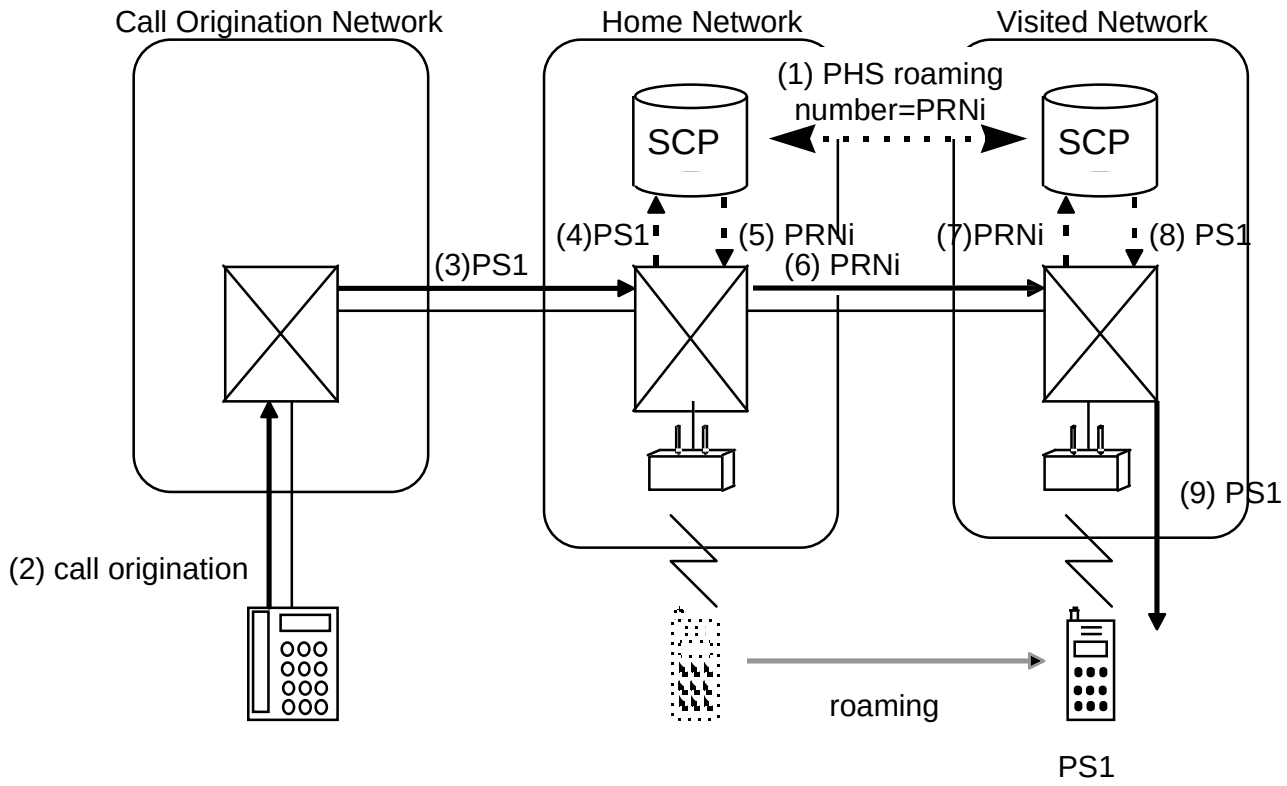

Figure 3-7/B-NW0.00 Example Procedure for routing a call using one PHS roaming number per roaming public PS

(1) The visited network informs PHS roaming number (PRN1) which is assigned to a roaming public PSs when the PS1 requests the first location registration in the visited network.
(2) A call to the roaming public PS is originated.
(3) Call origination network routes a call to home network.
(4) The home network makes a query to the SCP to get location of designated public PS (in this case PS1).
(5) The SCP returns the PHS roaming number (PRNi).
(6) The PHS switching center routes a call to the visited network using PRNi.
(7) The visited network decides a call is for roaming public PS by the PRNi, and makes a query with PRNi to the SCP to get location of roaming public PS.
(8) The SCP returns the PS1.
(9) The visited network delivers a call to PS1.

3.5.3 One Temporary Roaming Number at Call Origination to Roaming Public PS

In this case, one PHS roaming number is temporarily assigned to individual call origination to a roaming public PS during the roaming. All calls are routed to the visited network using PHS roaming number. PHS number needs not to be transferred to the visited network. The visited network can identify which public PS terminates a call routed by PHS roaming number.

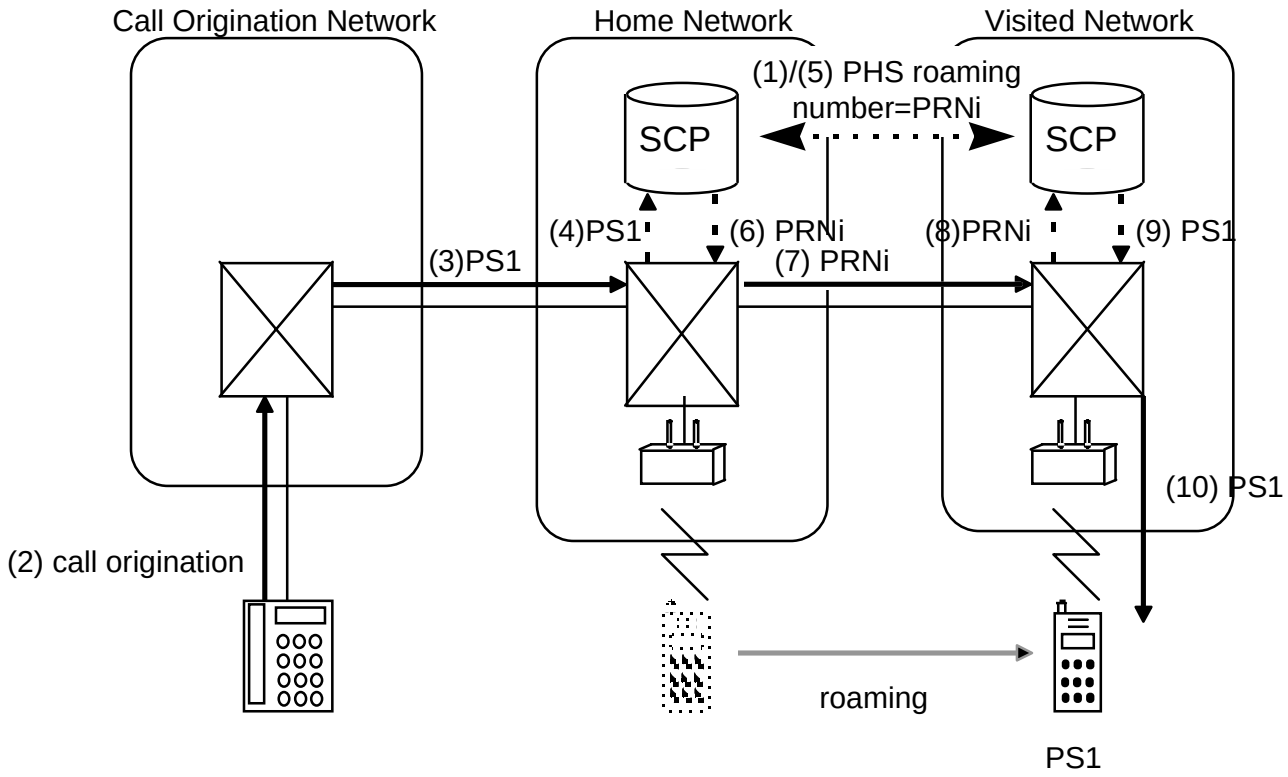

Figure 3-8/B-NW0.00 Example Procedure for Routing a Call Using One Temporary Roaming Number at Call Origination to Roaming Public PS

(1) The visited network informs identifier of visited network when the PS1 requests the first location registration in the visited network.
(2) A call to the roaming public PS is originated.
(3) Call origination network routes a call to home network.
(4) The home network makes a query to the SCP to get location of designated public PS (in this case PS1).
(5) The SCP sends request to the visited network using identifier of visited network in order to get the temporarily PHS roaming number (PRNi).
(6) The SCP returns the PHS roaming number (PRNi).
(7) The PHS switching center routes a call to the visited network using PRNi.
(8) The visited network decides a call is for roaming public PS by the PRNi, and makes a query with PRNi to the SCP to get location of roaming public PS.
(9) The SCP returns the PS1.
(10) The visited network delivers a call to PS1.

4. Future directions

The application of IN CS-3 modelling and the relation to IMT2000 are subject for further study. The ITU-T Recommendations relating to the IN CS-3, which will support IMT2000 requirements, are planned to be frozen by the end of 1998.

The PHS network attached to the PLMN, which is attaching the cell stations to the existing PLMN and utilizing the PLMN location registration and authentication functions, is subject for further study. This item may be studied according to the requests of the members after September 1996.

The roaming service between the public PHS network and the PLMN is subject for further study.

Annex A GLOSSARY and ABBREVIATIONS

This annex forms an integral part of this document.

GLOSSARY

*****A*****

authentication **ITU-T**

This is the function that acknowledges that the personal station carrying out communication is the correct personal station. It carries out call reception, call sending, location registration, etc.

*****B*****

*****C*****

Cell Station (CS) **ARIB**

The cell station carries out mobile radio communication with personal station on land.

Country Code (CC) **ITU-T**

The Country Code is information used to identify the country. It is contained in PHS Number and in PS and CS identification Codes. In the former case, it consists of one, two or three digits and is defined by ITU-T Recommendation E.164. And in the latter case, it consists of three digit and is defined by ITU-T Recommendation E.212 as a name of Mobile Country Code.

CS identification code (CSid) **ARIB**

The CS Identification Code is information used to identify the CS. It is not recognized by user and is used only in the air interface. The CSid structure is shown below.
Operator identification code+Paging area number+Additional id

*****D*****

*****E*****

*****F*****

*****G*****

*****H*****

Home Location Register (HLR) **ITU-T**

Register where the current location and all subscriber profile for PS are permanently stored.

home network **ITU-T**

The geographical area of the network where the user normally resides, or the service provider is associated with.

*****I*****

IN-structured PSTN/ISDN **PHS MoU**

PSTN/ISDN applies IN architecture.

Integrated Service Digital Network (ISDN) **ITU-T**

An integrated digital network in which the same digital switches and digital paths are used to establish connections for different services, for example, telephony, data.

Intelligent Network (IN) **ITU-T**

A telecommunications network architecture that provides flexibility for facilitating the introduction of new capabilities and services, including those under customer control.

international CSid **PHS MoU**

International CSid is information containing CC and CSid to identify the CS uniquely throughout the world..

international PSid **PHS MoU**

International PSid is information containing CC and PSid to identify the PS uniquely throughout the world..

*****J*****

*****K*****

*****L*****

Local Exchange (LE) **ITU-T**

An exchange in which subscriber’s lines terminate.

Location Information (LI) **TTC**

This contains one of following types of information depending on the status of personal station:
-personal station is roaming to other public PHS network and roaming number assigned by visited network for roaming personal station to route a call to visited network.
-existence of roaming personal station from other network and location of roaming personal station to be used for routing within the visited network, and
-location of personal station to be used for routing within the home network.

*****M*****

*****N*****

Non IN-structured PSTN/ISDN **PHS MoU**

PSTN/ISDN does not apply IN architecture.

*****O*****

*****P*****

Personal Station (PS) **TTC**

The personal station, as a subscriber communication terminal, is used to make land mobile radio communications to either personal stations or cell stations.

PS identification code (PSid) **ARIB**

The PS Identification Code is information used to identify the PS. It is not recognized by the user and is used only in the air interface.

PHS Switching Center (PSC) **PHS MoU**

This physicalentity provides the switching function for all personal stations. It may support a part of authentication and location registration function. It may also support subscribers other than personal stations.

Public Land Mobile Network (PLMN) **ITU-T**

PLMN is established and operated by an administration or RPOA (Recognized private operating agency) for the specific purpose of providing land mobile telecommunication services to the public. APLMN may be regarded as an extension of a fixed network (e.g. PSTN) or as an integral part of the PSTN. In the first case, it can be considered as a collection of mobile services switching center (MSC) area within a common numbering plan (e.g. service access codes) and a common routing plan (e.g. definition of crossover point); in this case the MSCs are the functional interfaces between the fixed network and a PLMN for call set-up. In the second case, it can be considered as an assemblage of special logic in existing of future PSTN/ISDN stored program controlled digital local exchanges, conceptually integrated within a common numbering and routing plan.

*****Q*****

*****R*****

roaming **TTC**

Indicate PHS userís action to access originating/terminating service when he moved from a network with his PHS roaming service subscription to another network.

*****S*****

subscriberdata **ITU-T**

All information concerning a specific PS which is required for service provisions, identification, authentication, routing, call handing, charging, operation and maintenance purposes. Some subscriber data are refferd to as permanent subscriber data, i.e. they can only be changed by administrative means. Other data are temporary subscriber data which may change as a result of normal operation of the system. Some data are referred to as

flexible length data, i.e. further values than those listed may be required in the future.

*****T*****

*****U*****

*****V*****

Visited Location Register (VLR) **ITU-T**

The location register, other than the home location register used by an PSC to retrieve , for instance, subscriber profile for handing of calls to or from a roaming PS, currently located in its area.

visited network **TTC**

The network, other than the home network that is visited by PS in roaming state.

*****W*****

*****X*****

*****Y*****

*****Z*****

ABBREVIATIONS

CC	Country Code
CS	Cell Station
CSid	Cell Station Identification Code
HLR	Home Location Register
IN	Intelligent Network
IMT2000	International Mobile Telecommunication 2000
ISDN	Integrated Service Digital Network
ITU-T	International Telecommunication Union-Telecommunication Standardization Sector
NDC	National Destination Code
PHS	Personal Handy-Phone System
PLMN	Public Land Mobile Network
PS	Personal Station
PSid	Personal Station Identification Code
PSC	PHS Switching Center
PSTN	Public Switched Telephone Network
SN	Subscriber Number
VLR	Visited Location Register