PHS MoU Document
C-IF0.00-03-TS

Title: PHS-FWA System: General Description of Interface Specifications
Version: 03
Date: June 7, 2000
PHS MoU Classification: Unrestricted
List of contents: 1. General 2. Principles 3. Access Network Model and Reference Points
Number of pages: 3

PHS MoU Group

c/o Association of Radio Industries and Businesses (ARIB)
14F, Nittochi Bldg., 4-1, Kasumigaseki, 1-choume, Chiyoda-ku, Tokyo 100-0013, Japan
TEL +81-3-5510-8599 FAX +81-3-3592-1103

History of Revised Versions

Version	Date	Outline
01	Dec.17, 1996	Established
02	July 11, 1997	Clause 1 is changed and Sub-clause 4.2 is deleted.
03		Changed all WLL into FWA. Clause 1, 3 is changed and clause 4 is deleted.

C-IF0.00-03-TS

PHS-FWA System:
General Description of Interface Specifications

Contents

1. General

This clause describes the general information and principles about C-IFx.xx series interface specifications of Personal Handy-Phone System. The current C-IFx.xx series interface specifications are constructed with follows.

C-IF0.00: PHS-FWA System: General Description of Interface Specifications

This document includes the general information, typical network model and interface reference points.

C-IF1.00: General Description of Interface Specifications between Terminal Equipment and FWA Subscriber Unit

This document includes the general information and common principles of C-IF1.0x series.

C-IF1.01: Interface Specification between Terminal Equipment and FWA Subscriber Unit
- Two-wire Analogue Interface -

This document applies an analogue two-wire interface model, because there is no integrated models for analogue two-wire interface.

C-IF1.02: Interface Specification between Terminal Equipment and FWA Subscriber Unit
-ISDN basic Rate Interface -

This document is based on ITU-T I.430,G.961, Q.921 and Q.931
I.430:Layer1 Specification of Basic Rate Interface
G.961:Digital Transmission System on Metallic Local Line for ISDN basic Rate Interface
Q.921:ISDN user-network interface - Data link layer specification
Q.931:ISDN user-network interface layer 3 specification for basic call control

C-IF2.00: General Description of Interface Specifications between FWA Subscriber Unit or FWA Personal Station and FWA Cell Station (Common Air Interface)

This document includes the general information and common principles of C-IF2.0x series.

C-IF2.01: Interface Specification between FWA Subscriber Unit or FWA Personal Station and FWA Cell Station (Common Air Interface)
- based on ARIB standard RCR STD-28 Appendix AB -

This document is based on ARIB standard RCR STD-28 Appendix AB.

C-IF3.00: General Description of Interface Specifications between FWA Access Controller and Service Node

This document includes the general information and common principles of C-IF3.0x

series.

C-IF3.01: Interface Specification between FWA Access Controller and Service Node
- Two-wire Analogue Interface -

This document applies an analogue two-wire interface model, because there is no integrated models for analogue two-wire interface.

C-IF3.02: Interface Specification between FWA Access Controller and Service Node
- ITU-T G964:V5.1 Interface -

This document is based on ITU-T G964:V5.1 interface.

C-IF3.03: Interface Specification between FWA Access Controller and Service Node
- ITU-T G965:V5.2 Interface -

This document is based on ITU-T G965:V5.2 interface.

C-IF3.04: Interface Specification between FWA Access Controller and Service Node
- Bellcore GR-303 Interface -

This document is based on Bellcore GR-303 interface.

C-IF3.05: Interface Specification between FWA Access Controller and Service Node
- ITU-T G.961: ISDN basic Rate Interface -

This document is based on ITU-T G.961, Q.921 and Q.931
G.961:Digital Transmission System on Metallic Local Line for ISDN basic Rate Interface
Q.921:ISDN user-network interface - Data link layer specification
Q.931:ISDN user-network interface layer 3 specification for basic call control

Other C-IFx.xx series interface specification will be defined in near future.

You can directly read the target PHS-FWA specifications to select above, if you need specific information immediately.

2. Principles

All of PHS-FWA interface specification documents have following principles.

i) PHS-FWA systems are able to be applied any public switched telephone network.
ii) PHS-FWA systems are able to be constructed by multi-vendor equipment.

3. Network Model and Reference Points

This clause indicates the PHS-FWA network model and reference points.

Typical PHS-FWA network model and reference points are described in figure 3-1/C-IF0.00.
Each reference point is explained as follows.

WIF1: PHS-FWA Subscriber unit Interface
WIF1 is the reference point of interface between Terminal Equipment and WSU (FWA Subscriber Unit).

WIF2: PHS-FWA Common Air Interface
WIF2 is the reference point of interface between WSU or WPS (FWA Personal Station) and WCS (FWA Cell Station).

WIF3: PHS-FWA - Service Node Interface
WIF3 is the reference point of interface between user WAC (FWA Access Controller) and SN (Service Node).

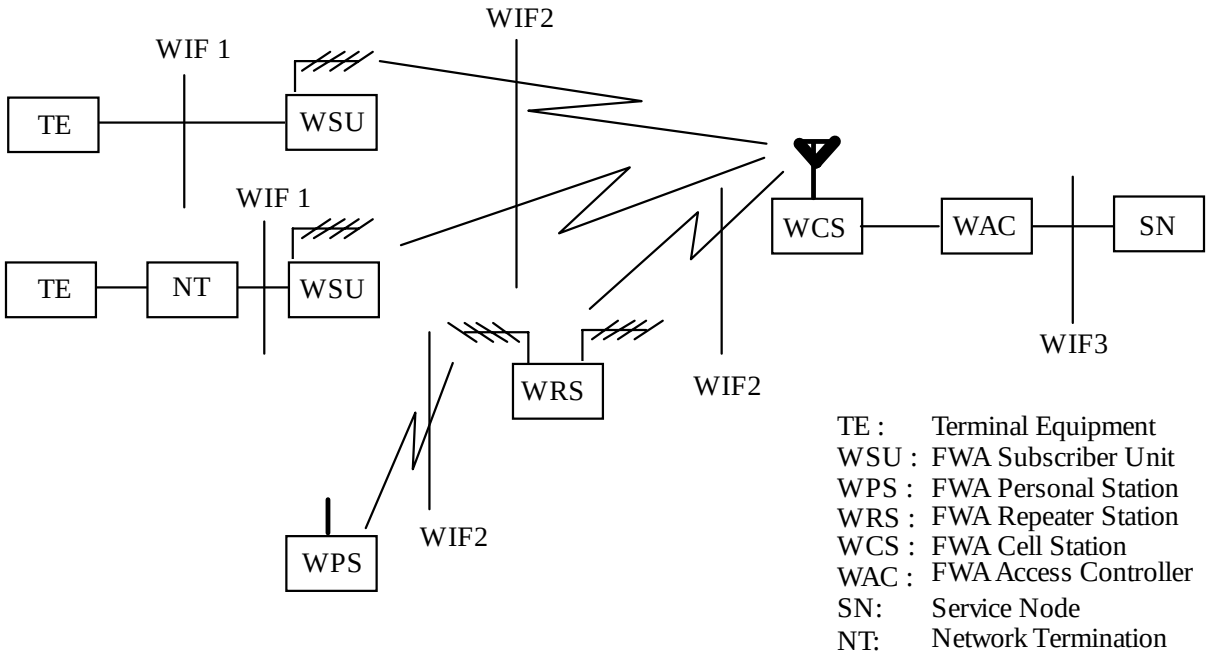

Figure 3-1/C-IF0.00 PHS-FWA Network Model